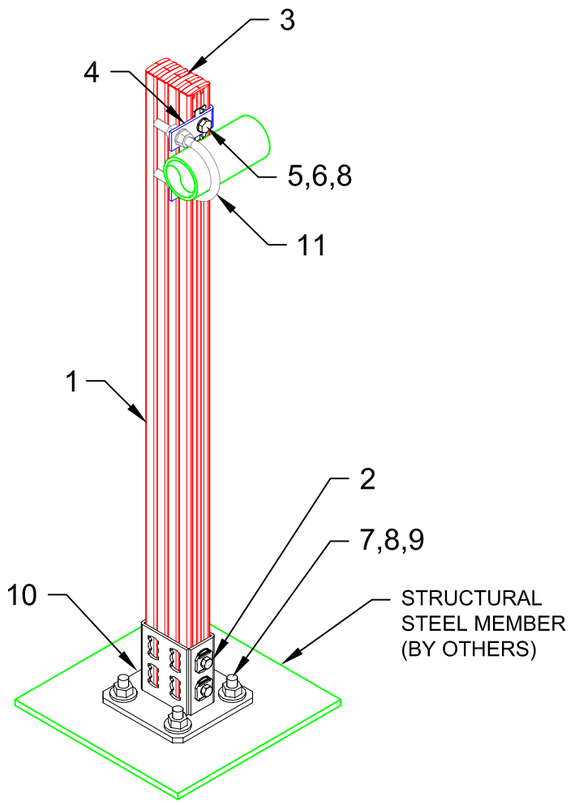

ELEV. 02
SHEET 1/1

01 ISOMETRIC
N.T.S.

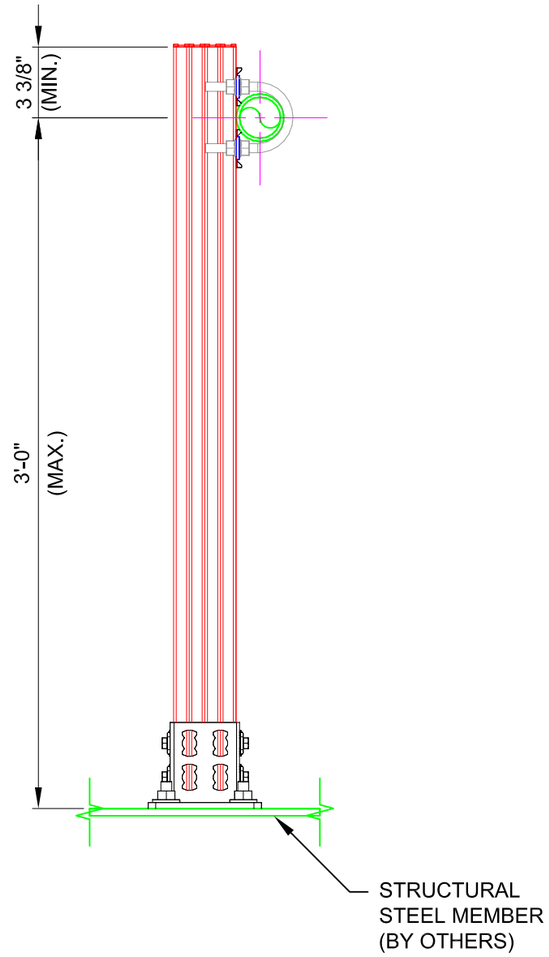

02 ELEVATION
N.T.S.

No.	Unit Qty	Unit	Description	Box Qty	# Boxes Needed	Item No.	Torque ft - lb
1	AS REQ'D	EA	STRUT HS-158-12/HDG 10' B2B	1	AS REQ'D	2007087	
2	4	EA	CHANNEL CONNECTOR MQN-HDG PLUS	50	1	387779	
3	2	EA	CHANNEL END CAP MEK RED	50	1	244886	-
4	2	EA	MQV-UB-M12 (#304884)	10	1	SPECIAL	-
5	2	EA	WING NUT MQM-F3/8"-F	25	1	304136	-
6	2	EA	HEX HEAD BOLT 3/8" x 1-1/4" SS316	50	1	411788	30
7	4	EA	HEX NUT STANDARD 3/8" SS316	100	1	411775	-
8	6	EA	WASHER 3/8" SS316	200	1	411780	-
9	4	EA	X-BTW10-24-6 SN12-R	100	1	377076	6
10	1	EA	MQP-82-4	VARIES	VARIES	SPECIAL	-
11	1	EA	U-BOLT	VARIES	VARIES	SPECIAL	-

NOTE(S):

1. PRELIMINARY NOT FOR CONSTRUCTION
2. DESIGN ASSUMPTIONS:
   a. DESIGN LOADS (STATIC, U.N.O.):
      DEAD LOAD (VERTICAL) = 200lb.
      LATERAL LOADS
      PARALLEL TO PIPE = 50lb.
      PERPENDICULAR TO PIPE = 0lb.
   b. LATERAL LOADS ARE WIND OR SEISMIC PER GOVERNING CODE.
   c. LATERAL LOADS APPLIED AT THE SAME TIME AS DEAD LOAD.
   d. BUILDING CODE: NOT SPECIFIED
   e. CORROSION RESISTANCE REQD.: HDG
3. ALL LOADS ASSUMED TO ACT AT CENTER OF PIPE(S), U.N.O.
4. REFER TO COMPONENT MANUFACTURER'S IFUs FOR REQUIRED INSTALLATION INFO.
5. E.O.R. MUST BE NOTIFIED OF ANY DEVIATIONS FROM EXISTING/ NEW SUBSTRATE CONDITIONS SHOWN HEREIN TO VALIDATE ACCEPTANCE OF THIS HILTI DESIGN PRIOR TO INSTALLATION.
6. MAX. 1 PIPE PER SUPPORT.
7. ATTACHMENT TO BASE MATERIAL ARE CONCEPTUAL ONLY. ATTACHMENT SHALL BE DESIGNED BY THE ENGINEER OF RECORD.

All loading and design criteria supplied by customer is assumed accurate. Only the stated Design Assumptions were considered, and must be verified by the responsible Engineer of Record (EOR). The basis of Hilti component and connection design is the published data in the current Hilti Technical Guide, including material and cross-section properties, allowable load values, factors of safety, methods of calculation, and limiting factors. The EOR must verify suitability for any specific application, and the capacity of the supportive structure to receive the shown configuration and associated reaction loads. Modification to components and/or design may alter performance and must be evaluated by the EOR.

TYPICAL DETAIL TYPE:

PIPE SUPPORT

TYPICAL DETAIL DESCRIPTION:

POST

DESIGNED BY:	REVIEWED BY:
KL	AJV
DRAWN BY:	ISSUE DATE:
HAM	10 DEC 14

REVISIONS:

NO:	DESCRIPTION:	DATE:
A	ORIGINAL ISSUE	10 DEC 14

TYPICAL DETAIL NOMENCLATURE:

P-P52-S

DRAWING NUMBER:	SHEET:
01	1/1

\\hilti.com\us\TEAMS\Installations\Projects\TYPICALS\TYPICAL LIBRARY\PIPING (P)\CAD\P-P52-S.dwg, 12/29/2014 3:08:30 PM