Maximum"H" (in)	Allowable Vertical Load (lbs)	Allowable Transverse Load (lbs)	Allowable Longitudinal Load (lbs)
48	6714	0	0
48	2290	687	0
48	1916	0	575
60	6714	0	0
60	1833	550	0
60	1666	0	500
72	6714	0	0
72	1542	462	0
72	1208	0	362

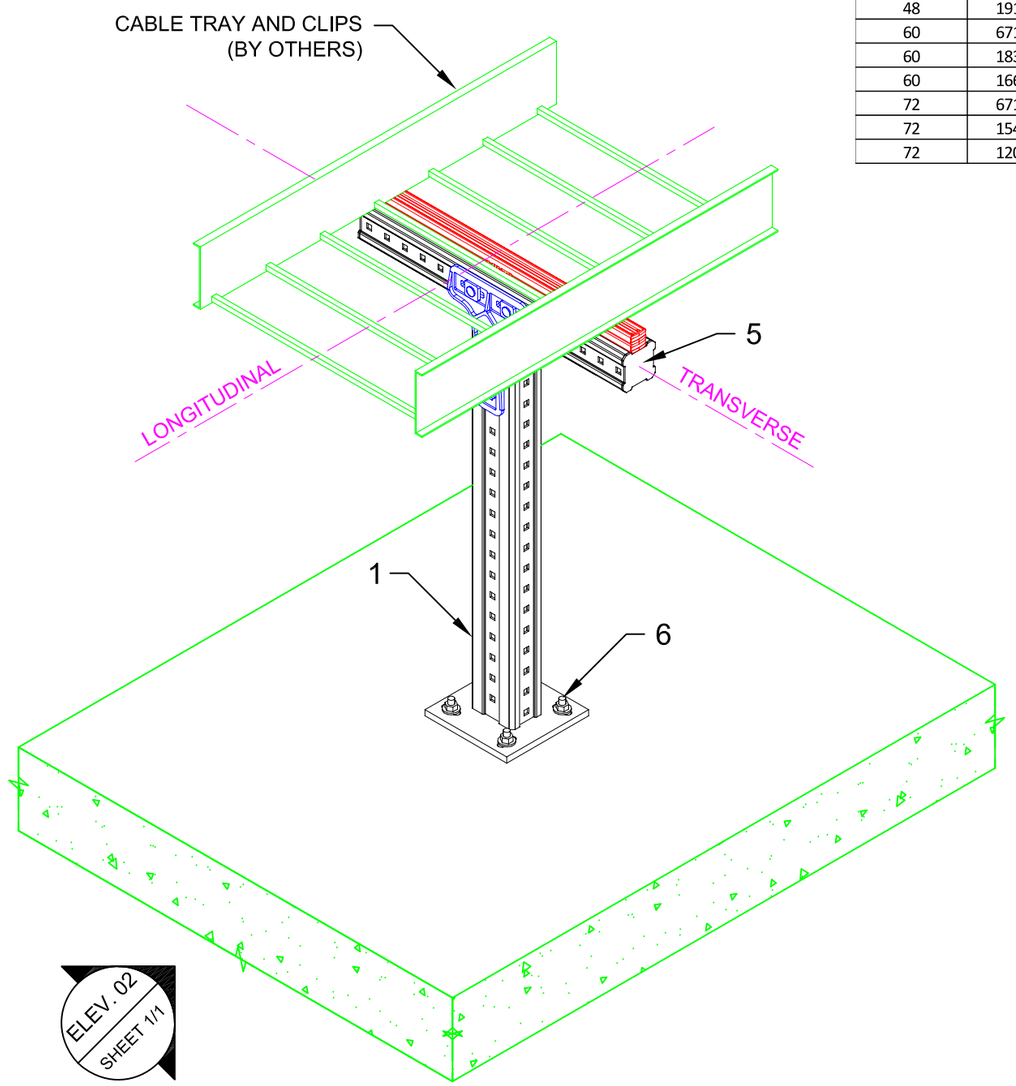

01 ISOMETRIC
N.T.S.

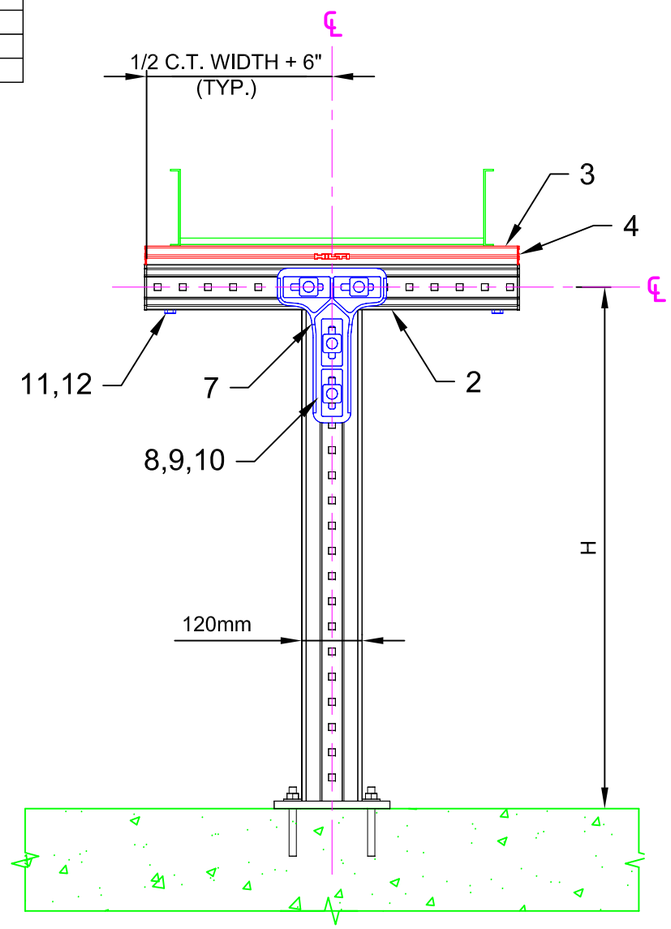

02 ELEVATION
N.T.S.

No.	Unit Qty	Unit	Description	Box Qty	# Boxes Needed	Item No.
1	1	EA	CONNECTOR MIC-C120-D-2000 WELDED BRACKET	1	1	270472
2	AS REQ'D	EA	GIRDER MI-90 3M	1	AS REQ'D	304798
3	AS REQ'D	EA	STRUT HS-158-12/HDG 10'	1	AS REQ'D	407570
4	4	EA	CHANNEL END CAP MEK RED	50	1	244886
5	2	EA	GIRDER END CAP MIA-EC90	25	1	432077
6	4	EA	USE KB3 OR KB-TZ AS APPROPRIATE	VARIES	VARIES	VARIES
7	1	EA	CONNECTOR MIC-90-LH	3	1	2048107
8	4	EA	EASYHAND SCREW MIA-EH90	10	1	304887
9	4	EA	PREVAIL TORQUE HEX NUT M12-F-SL-WS 3/4"	100	1	382897
10	4	EA	TOOTHED PLATE MIA-TP	20	1	305707
11	2	EA	ONEHAND SCREW MIA-OH90	10	1	304889
12	2	EA	PREVAIL TORQUE HEX NUT M12-F-SL-WS 3/4"	100	1	382897

NOTE(S):

1. ALLOWABLE LOADS CONSIDER APPROPRIATE LOAD FACTORS AND LOAD COMBINATIONS PER APPLICABLE CODES AND STANDARDS.
2. ALL LOADS ASSUMED TO ACT AT HORIZONTAL ℄ OF CABLE TRAY WHICH IS SITTING DIRECTLY ON TOP OF MI GIRDER, U.N.O.
3. VERTICAL LOAD APPLIED WITH ONE HORIZONTAL LOAD AT A TIME.
4. CABLE TRAY HORIZONTAL OFFSET FROM MI POST ℄ = 0"

All loading and design criteria supplied by customer is assumed accurate. Only the stated Design Assumptions were considered, and must be verified by the responsible Engineer of Record (EOR). The basis of Hilti component and connection design is the published data in the current Hilti Technical Guide, including material and cross-section properties, allowable load values, factors of safety, methods of calculation, and limiting factors. The EOR must verify suitability for any specific application, and the capacity of the supportive structure to receive the shown configuration and associated reaction loads. Modification to components and/or design may alter performance and must be evaluated by the EOR.

PROJECT NAME:

TYPICAL DETAILS

SERVICE REQUEST DESCRIPTION:

CABLE TRAY
T-POST
CONCRETE

DESIGNED BY:	REVIEWED BY:
AJV	ISE
DRAWN BY:	ISSUE DATE:
GAB	22 DEC 14

REVISIONS:

NO:	DESCRIPTION:	DATE:
A	ORIGINAL ISSUE	22 DEC 14

SERVICE REQUEST NUMBER:

TD-CT-TP01-C

DRAWING NUMBER:	SHEET:
01	1/1