Maximum "H" (in)	Allowable Vertical Load (lbs)	Allowable Transverse Load (lbs)	Allowable Longitudinal Load (lbs)
48	6714	0	0
48	2290	687	0
48	1916	0	575
60	6714	0	0
60	1833	550	0
60	1666	0	500
72	6714	0	0
72	1542	462	0
72	1208	0	362

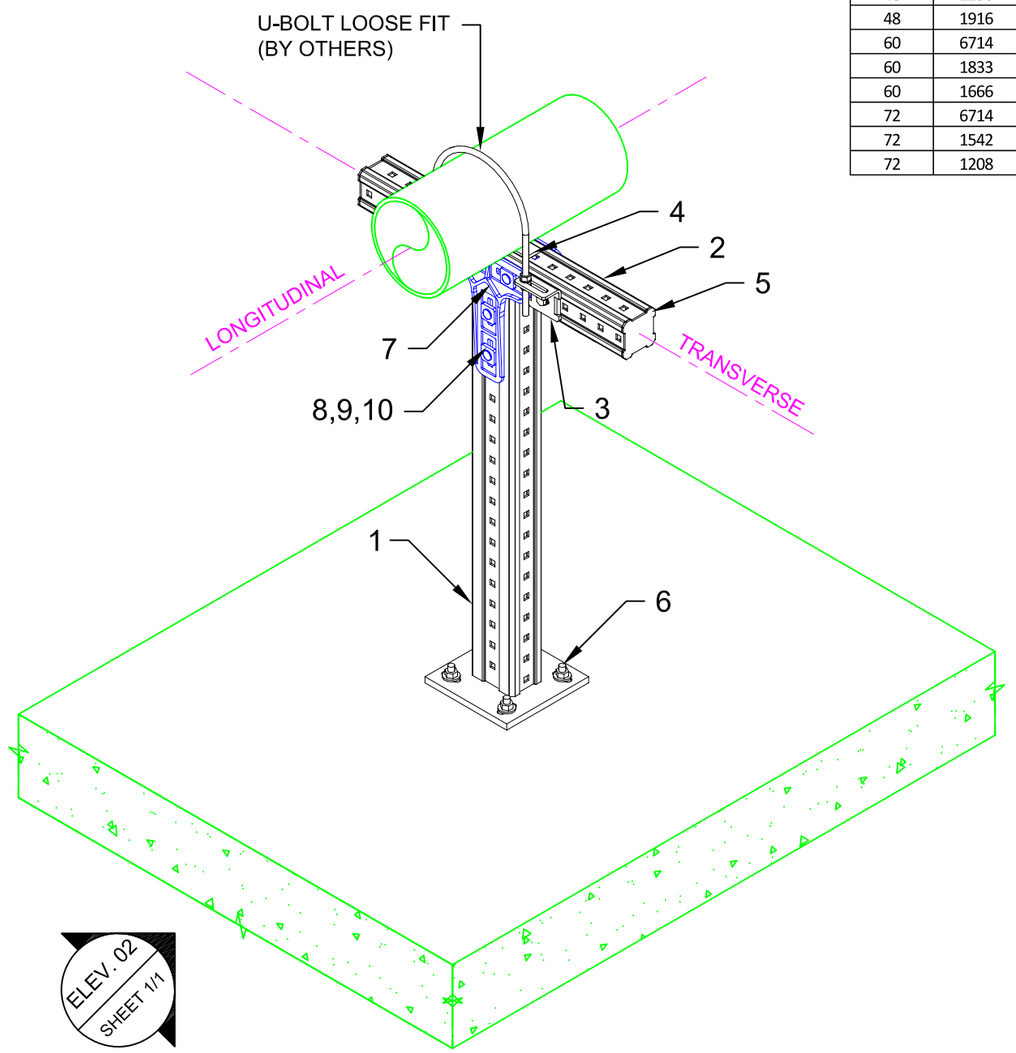

01 ISOMETRIC
N.T.S.

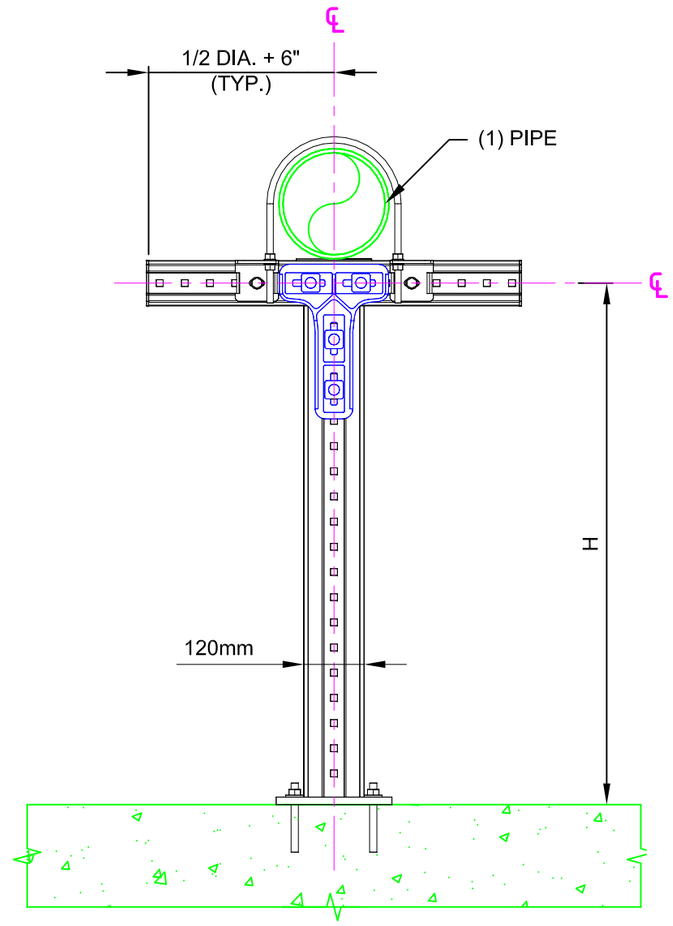

02 ELEVATION
N.T.S.

No.	Unit Qty	Unit	Description	Box Qty	# Boxes Needed	Item No.
1	1	EA	CONNECTOR MIC-C120-D-2000 WELDED BRACKET	1	1	270472
2	AS REQ'D	EA	GIRDER MI-90 3M	1	AS REQ'D	304798
3	1	EA	CONNECTOR U-BOLT MIC-UB90-M16	6	1	304834
4	2	EA	CONNECTOR PIPE SHOE MIC-PG	10	1	304842
5	2	EA	GIRDER END CAP MIA-EC90	25	1	432077
6	4	EA	USE KB3 OR KB-TZ AS APPROPRIATE	VARIES	VARIES	VARIES
7	1	EA	CONNECTOR MIC-90-LH	3	1	2048107
8	4	EA	EASYHAND SCREW MIA-EH90	10	1	304887
9	4	EA	PREVAIL TORQUE HEX NUT M12-F-SL-WS 3/4"	100	1	382897
10	4	EA	TOOTHED PLATE MIA-TP	20	1	305707

NOTE(S):

1. ALLOWABLE LOADS CONSIDER APPROPRIATE LOAD FACTORS AND LOAD COMBINATIONS PER APPLICABLE CODES AND STANDARDS.
2. ALL LOADS ASSUMED TO ACT AT HORIZONTAL ℄ OF PIPE(S) WHICH ARE SITTING DIRECTLY ON TOP OF MI GIRDER, U.N.O.
3. VERTICAL LOAD APPLIED WITH ONE HORIZONTAL LOAD AT A TIME.
4. PIPE HORIZONTAL OFFSET FROM MI POST ℄ = 0"

All loading and design criteria supplied by customer is assumed accurate. Only the stated Design Assumptions were considered, and must be verified by the responsible Engineer of Record (EOR). The basis of Hilti component and connection design is the published data in the current Hilti Technical Guide, including material and cross-section properties, allowable load values, factors of safety, methods of calculation, and limiting factors. The EOR must verify suitability for any specific application, and the capacity of the supportive structure to receive the shown configuration and associated reaction loads. Modification to components and/or design may alter performance and must be evaluated by the EOR.

PROJECT NAME:

TYPICAL DETAILS

SERVICE REQUEST DESCRIPTION:

PIPING
T-POST
CONCRETE

DESIGNED BY:	REVIEWED BY:
AJV	ISE
DRAWN BY:	ISSUE DATE:
HAM	02 DEC 14

REVISIONS:

NO:	DESCRIPTION:	DATE:
A	ORIGINAL ISSUE	02 DEC 14

SERVICE REQUEST NUMBER:

TD-P-TP01-C

DRAWING NUMBER:	SHEET:
01	1/1

Maximum "H" (in)	Allowable Vertical Load (lbs)	Allowable Transverse Load (lbs)	Allowable Longitudinal Load (lbs)
48	6714	0	0
48	790	237	0
48	583	0	175
60	6714	0	0
60	625	187	0
60	458	0	137
72	6714	0	0
72	500	150	0
72	375	0	112

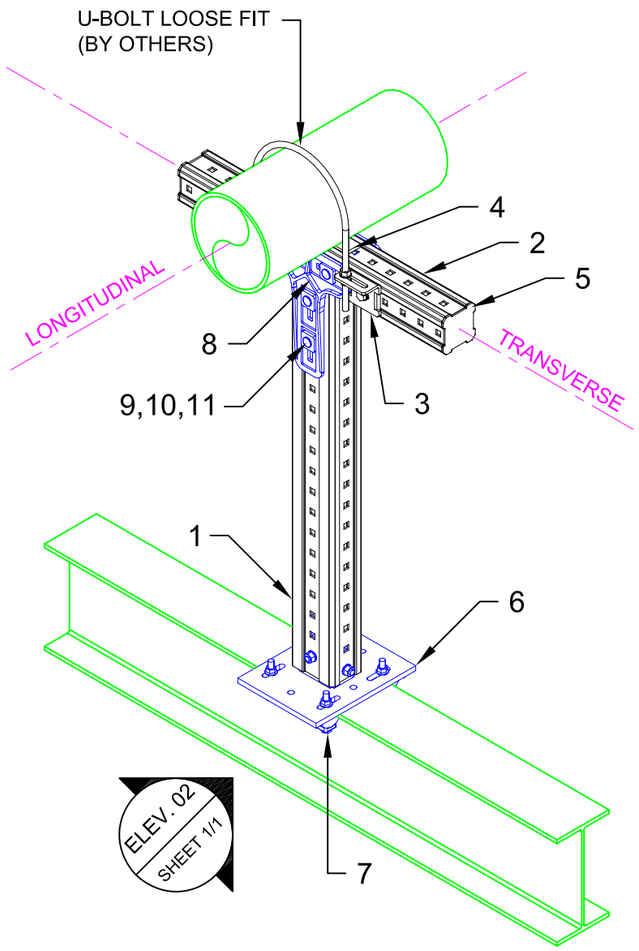

01 ISOMETRIC
N.T.S.

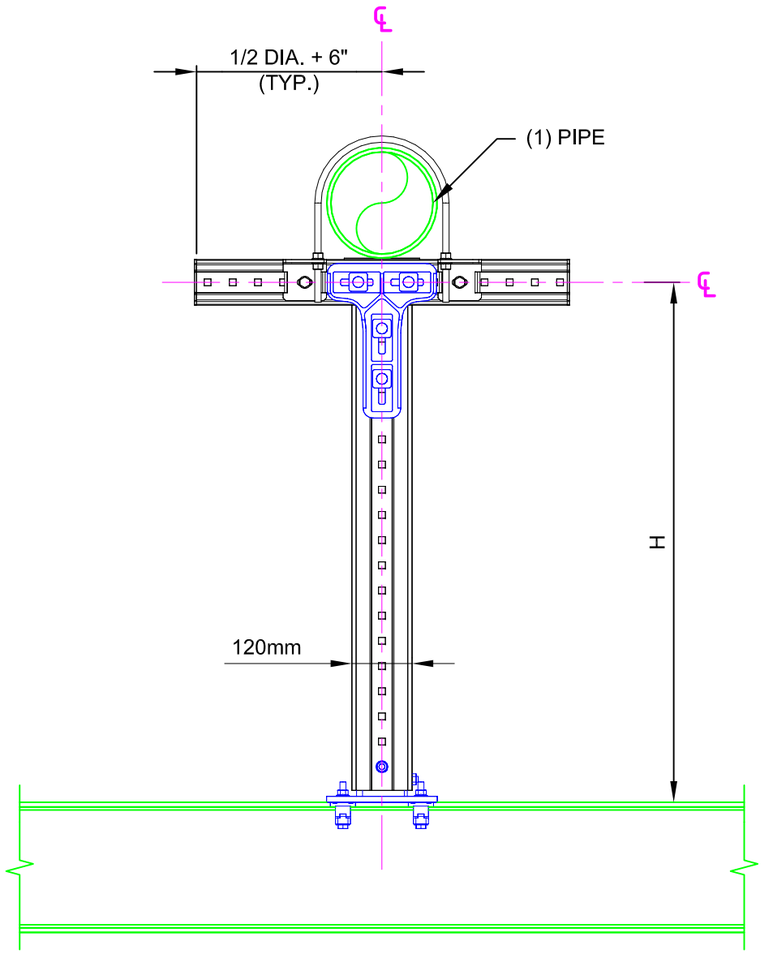

02 ELEVATION
N.T.S.

MIC-S120-X

Beam Width Table

X	'B' Width	Item No.
A	2.9 to 6.5	304818
B	6.5 to 9.2	304819
C	9.2 to 11.8	304820

No.	Unit Qty	Unit	Description	Box Qty	# Boxes Needed	Item No.
1	AS REQ'D	EA	GIRDER MI-120 3M	1	AS REQ'D	304800
2	AS REQ'D	EA	GIRDER MI-90 3M	1	AS REQ'D	304798
3	1	EA	CONNECTOR U-BOLT MIC-UB90-M16	6	1	304834
4	2	EA	CONNECTOR PIPE SHOE MIC-PG	10	1	304842
5	2	EA	GIRDER END CAP MIA-EC90	25	1	432077
6	1	EA	CONNECTOR MIC-S120-X STEEL (SEE TABLE)	2	1	VARIES
7	4	EA	BEAM CLAMP MI-SGC-M12	16	1	233859
8	1	EA	CONNECTOR MIC-90-LH	3	1	2048107
9	4	EA	EASYHAND SCREW MIA-EH90	10	1	304887
10	4	EA	PREVAIL TORQUE HEX NUT M12-F-SL-WS 3/4"	100	1	382897
11	4	EA	TOOTHED PLATE MIA-TP	20	1	305707

NOTE(S):

1. ALLOWABLE LOADS CONSIDER APPROPRIATE LOAD FACTORS AND LOAD COMBINATIONS PER APPLICABLE CODES AND STANDARDS.
2. ALL LOADS ASSUMED TO ACT AT HORIZONTAL ℄ OF PIPE(S) WHICH ARE SITTING DIRECTLY ON TOP OF MI GIRDER, U.N.O.
3. VERTICAL LOAD APPLIED WITH ONE HORIZONTAL LOAD AT A TIME.
4. PIPE HORIZONTAL OFFSET FROM MI POST ℄ = 0"

All loading and design criteria supplied by customer is assumed accurate. Only the stated Design Assumptions were considered, and must be verified by the responsible Engineer of Record (EOR). The basis of Hilti component and connection design is the published data in the current Hilti Technical Guide, including material and cross-section properties, allowable load values, factors of safety, methods of calculation, and limiting factors. The EOR must verify suitability for any specific application, and the capacity of the supportive structure to receive the shown configuration and associated reaction loads. Modification to components and/or design may alter performance and must be evaluated by the EOR.

PROJECT NAME:

TYPICAL DETAILS

SERVICE REQUEST DESCRIPTION:

PIPING
T-POST
STEEL

DESIGNED BY:	REVIEWED BY:
AJV	ISE
DRAWN BY:	ISSUE DATE:
HAM	02 DEC 14

REVISIONS:

NO:	DESCRIPTION:	DATE:
A	ORIGINAL ISSUE	02 DEC 14

SERVICE REQUEST NUMBER:

TD-P-TP01-S

DRAWING NUMBER:	SHEET:
01	1/1

Maximum"L1" (in)	Allowable Vertical Load (lbs)	Allowable Transverse Load (lbs)	Allowable Longitudinal Load (lbs)
48	1892	0	0
48	1892	567	0
48	1750	0	525
60	1742	0	0
60	1742	522	
60	1416	0	425
72	1607	0	0
72	1607	482	0
72	1250	0	375

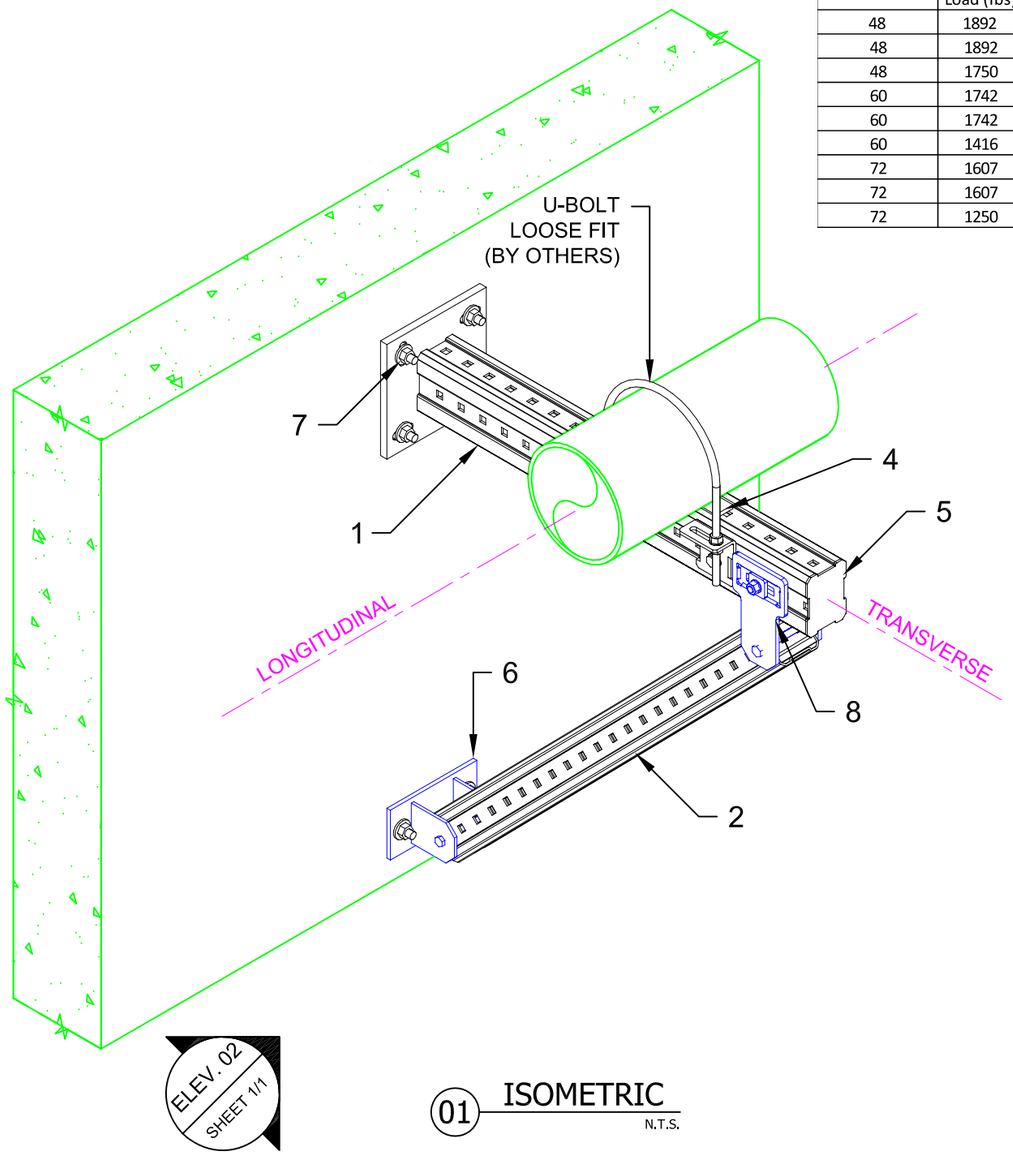

01 ISOMETRIC
N.T.S.

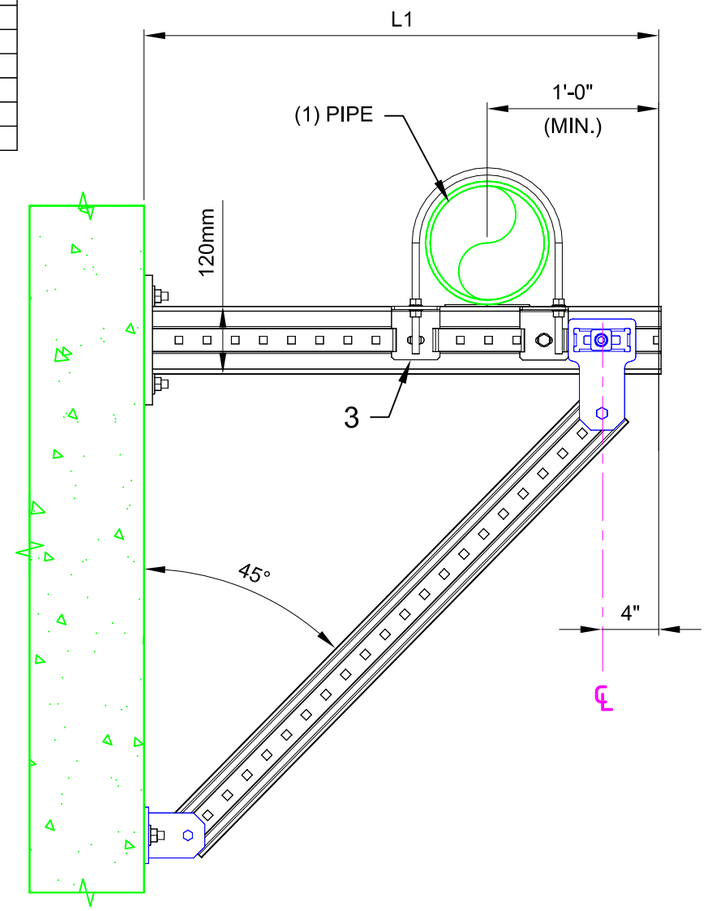

02 ELEVATION
N.T.S.

No.	Unit Qty	Unit	Description	Box Qty	# Boxes Needed	Item No.
1	1	EA	CONNECTOR MIC-C120-D-2000 WELDED BRACKET	1	1	270472
2	AS REQ'D	EA	GIRDER MI-90 3M	1	AS REQ'D	304798
3	1	EA	CONNECTOR U-BOLT MIC-UB120-M16	6	1	304835
4	2	EA	CONNECTOR PIPE SHOE MIC-PG	10	1	304842
5	1	EA	GIRDER END CAP MIA-EC120	25	1	432078
6	1	EA	CONNECTOR MIC-CU-MA CONCRETE	4	1	304828
7	6	EA	USE KB3 OR KB-TZ AS APPROPRIATE	VARIES	VARIES	VARIES
8	1	EA	CONNECTOR MIC-U-MA	2	1	304806

NOTE(S):

1. ALLOWABLE LOADS CONSIDER APPROPRIATE LOAD FACTORS AND LOAD COMBINATIONS PER APPLICABLE CODES AND STANDARDS.
2. ALL LOADS ASSUMED TO ACT AT HORIZONTAL ℄ OF PIPE(S) WHICH ARE SITTING DIRECTLY ON TOP OF MI GIRDER, U.N.O.
3. VERTICAL LOAD APPLIED WITH ONE HORIZONTAL LOAD AT A TIME.

All loading and design criteria supplied by customer is assumed accurate. Only the stated Design Assumptions were considered, and must be verified by the responsible Engineer of Record (EOR). The basis of Hilti component and connection design is the published data in the current Hilti Technical Guide, including material and cross-section properties, allowable load values, factors of safety, methods of calculation, and limiting factors. The EOR must verify suitability for any specific application, and the capacity of the supportive structure to receive the shown configuration and associated reaction loads. Modification to components and/or design may alter performance and must be evaluated by the EOR.

PROJECT NAME:

TYPICAL DETAILS

SERVICE REQUEST DESCRIPTION:

PIPING
BRACED CANTILEVER
CONCRETE

DESIGNED BY: AJV

REVIEWED BY: ISE

DRAWN BY: HAM

ISSUE DATE: 02 DEC 14

REVISIONS:

NO:	DESCRIPTION:	DATE:
A	ORIGINAL ISSUE	02 DEC 14

SERVICE REQUEST NUMBER:

TD-P-BC02-C

DRAWING NUMBER: 01

SHEET: 1/1

Maximum"L1" (in)	Allowable Vertical Load (lbs)	Allowable Transverse Load (lbs)	Allowable Longitudinal Load (lbs)
48	1500	0	0
48	1500	450	0
48	666	0	200
60	1428	0	0
60	1428	428	0
60	540	0	162
72	1392	0	0
72	1392	417	0
72	458	0	137

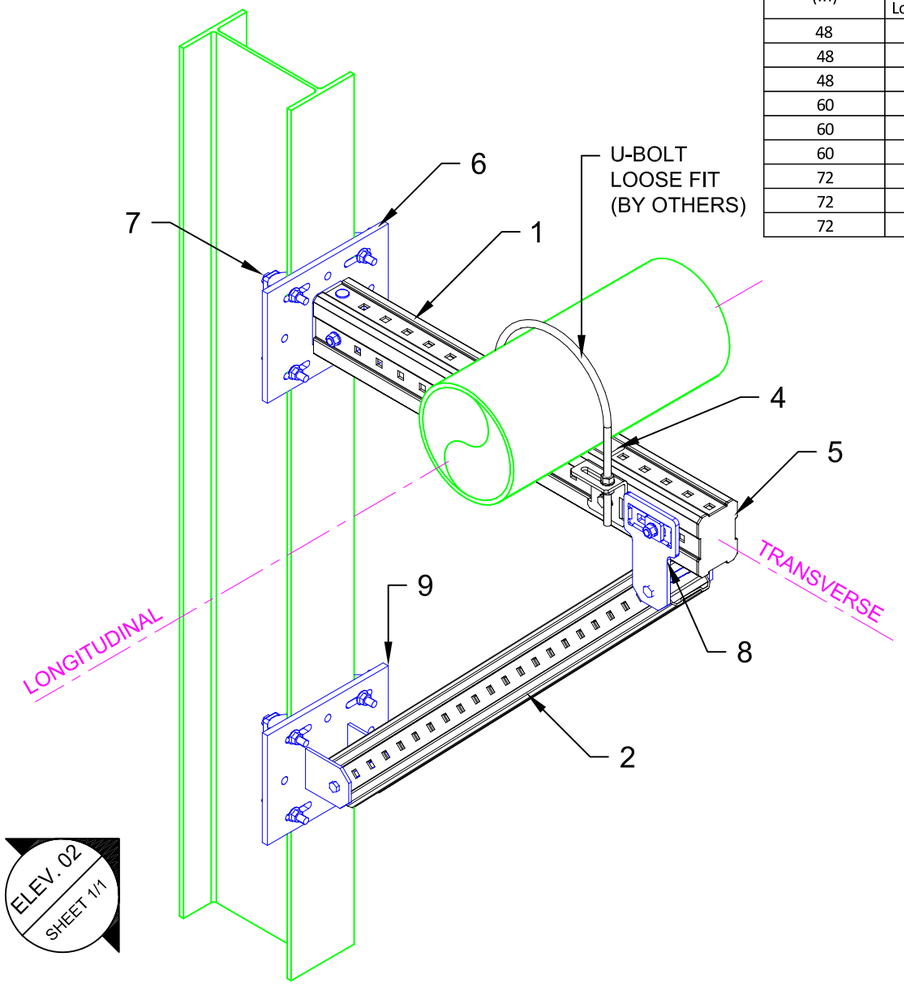

01 ISOMETRIC
N.T.S.

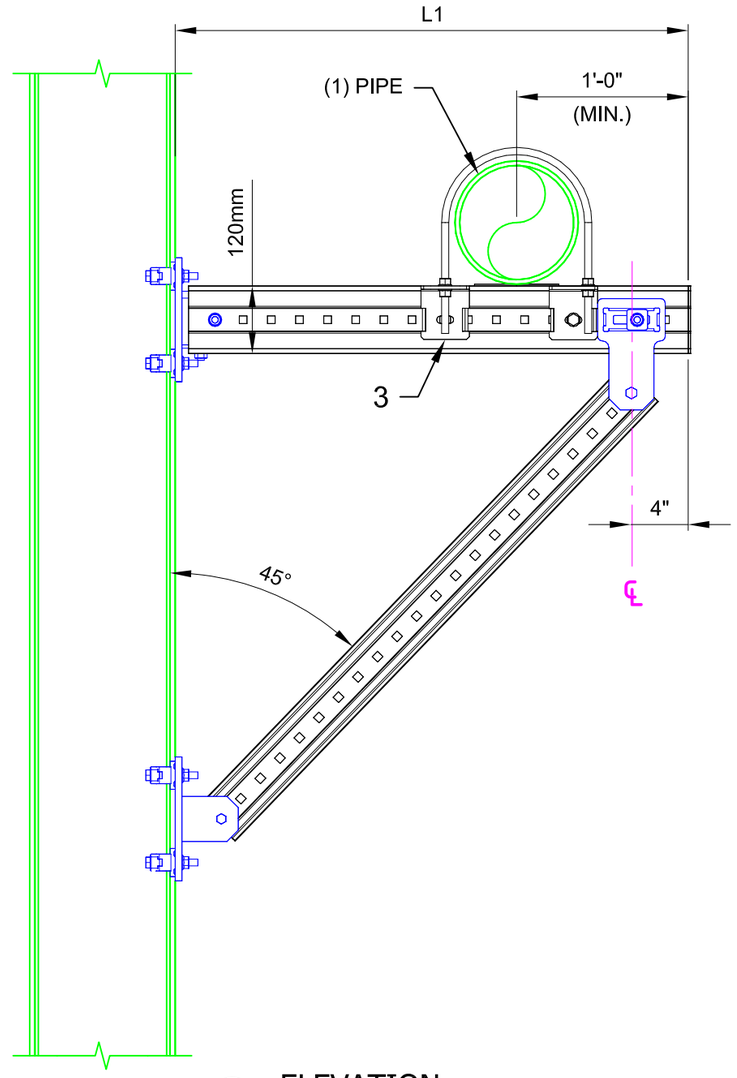

02 ELEVATION
N.T.S.

MIC-S120-X

Beam Width Table

X	'B' Width	Item No.
A	2.9 to 6.5	304818
B	6.5 to 9.2	304819
C	9.2 to 11.8	304820

MIC-SX-MA

Beam Width Table

X	'B' Width	Item No.
A	2.9 to 6.5	304815
B	6.5 to 9.2	304816
C	9.2 to 11.8	304817

No.	Unit Qty	Unit	Description	Box Qty	# Boxes Needed	Item No.
1	AS REQ'D	EA	GIRDER MI-120 3M	1	AS REQ'D	304800
2	AS REQ'D	EA	GIRDER MI-90 3M	1	AS REQ'D	304798
3	1	EA	CONNECTOR U-BOLT MIC-UB120-M16	6	1	304835
4	2	EA	CONNECTOR PIPE SHOE MIC-PG	10	1	304842
5	1	EA	GIRDER END CAP MIA-EC120	25	1	432078
6	1	EA	CONNECTOR MIC-S120-X STEEL (SEE TABLE)	2	1	VARIES
7	8	EA	BEAM CLAMP MI-SGC-M12	16	1	233859
8	1	EA	CONNECTOR MIC-U-MA	2	1	304806
9	1	EA	CONNECTOR MIC-SX-MA STEEL (SEE TABLE)	2	1	VARIES

NOTE(S):

1. ALLOWABLE LOADS CONSIDER APPROPRIATE LOAD FACTORS AND LOAD COMBINATIONS PER APPLICABLE CODES AND STANDARDS.
2. ALL LOADS ASSUMED TO ACT AT HORIZONTAL ℄ OF PIPE(S) WHICH ARE SITTING DIRECTLY ON TOP OF MI GIRDER, U.N.O.
3. VERTICAL LOAD APPLIED WITH ONE HORIZONTAL LOAD AT A TIME.

All loading and design criteria supplied by customer is assumed accurate. Only the stated Design Assumptions were considered, and must be verified by the responsible Engineer of Record (EOR). The basis of Hilti component and connection design is the published data in the current Hilti Technical Guide, including material and cross-section properties, allowable load values, factors of safety, methods of calculation, and limiting factors. The EOR must verify suitability for any specific application, and the capacity of the supportive structure to receive the shown configuration and associated reaction loads. Modification to components and/or design may alter performance and must be evaluated by the EOR.

PROJECT NAME:

TYPICAL DETAILS

SERVICE REQUEST DESCRIPTION:

PIPING
BRACED CANTILEVER
STEEL

DESIGNED BY:	REVIEWED BY:
AJV	ISE
DRAWN BY:	ISSUE DATE:
HAM	02 DEC 14

REVISIONS:

NO:	DESCRIPTION:	DATE:
A	ORIGINAL ISSUE	02 DEC 14

SERVICE REQUEST NUMBER:

TD-P-BC02-S

DRAWING NUMBER:	SHEET:
01	1/1

Maximum "H" (in)	Allowable Vertical Load (lbs)	Allowable Transverse Load (lbs)	Allowable Longitudinal Load (lbs)
48	3285	0	0
48	2541	762	0
48	3125	0	937
60	3285	0	0
60	2541	762	0
60	3083	0	925
72	3285	0	0
72	2500	750	0
72	2416	0	725

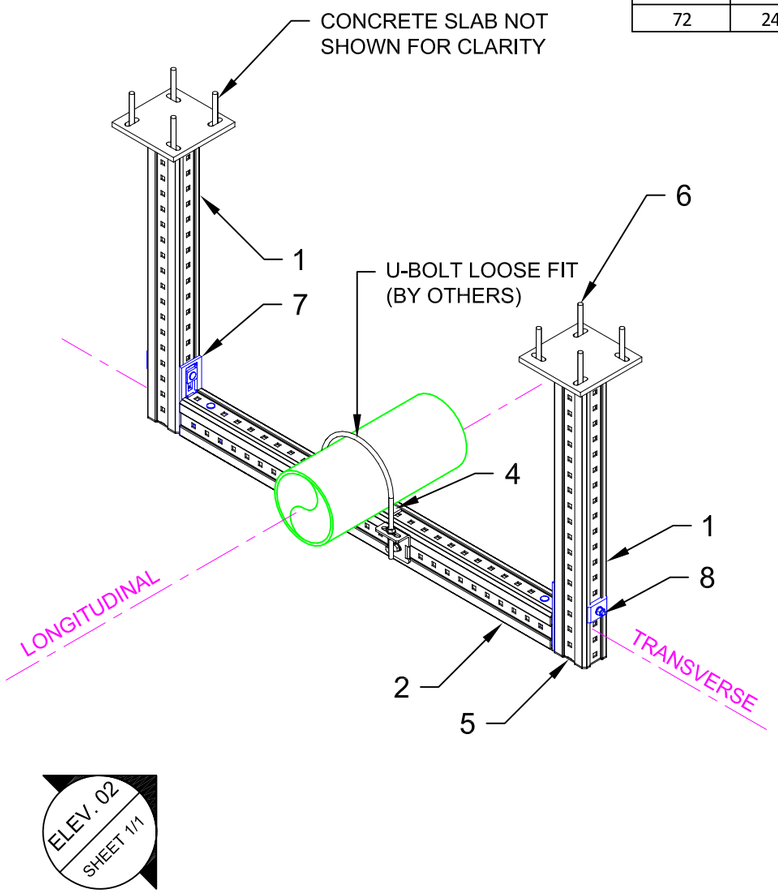

01 ISOMETRIC
N.T.S.

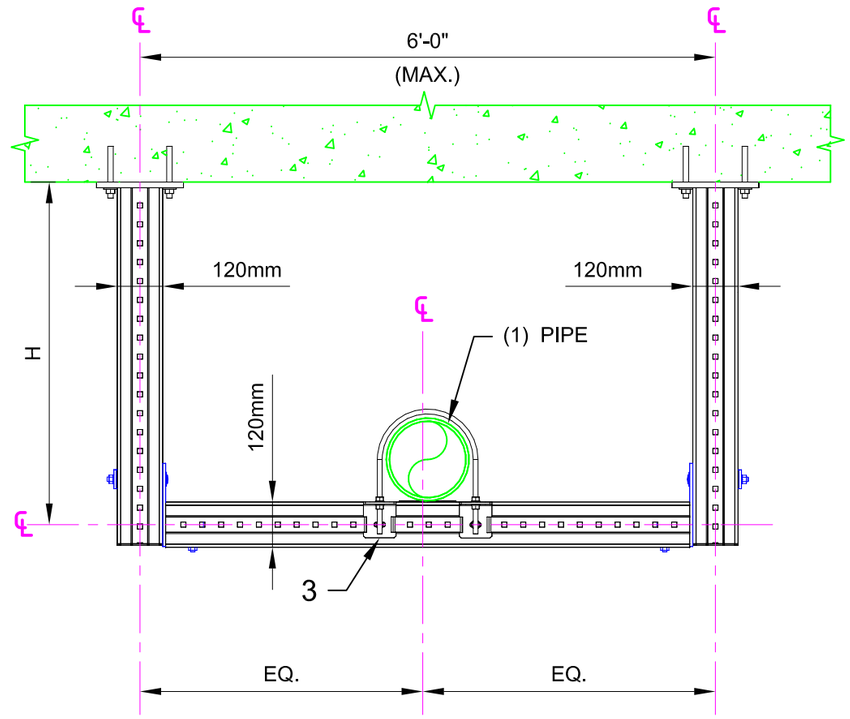

02 ELEVATION
N.T.S.

No.	Unit Qty	Unit	Description	Box Qty	# Boxes Needed	Item No.
1	2	EA	CONNECTOR MIC-C120-D-2000 WELDED BRACKET	1	2	270472
2	AS REQ'D	EA	GIRDER MI-120 3M	1	AS REQ'D	304800
3	1	EA	CONNECTOR U-BOLT MIC-UB90-M16	6	1	304834
4	2	EA	CONNECTOR PIPE SHOE MIC-PG	10	1	304842
5	2	EA	GIRDER END CAP MIA-EC120	25	1	432078
6	8	EA	USE KB-TZ AS APPROPRIATE	VARIES	VARIES	VARIES
7	2	EA	CONNECTOR MIC-120-U	4	1	304804
8	2	EA	EASYHAND SCREW MIA-EH120	10	1	304888

NOTE(S):

1. ALLOWABLE LOADS CONSIDER APPROPRIATE LOAD FACTORS AND LOAD COMBINATIONS PER APPLICABLE CODES AND STANDARDS.
2. ALL LOADS ASSUMED TO ACT AT HORIZONTAL ℄ OF PIPE(S) WHICH ARE SITTING DIRECTLY ON TOP OF MI GIRDER, U.N.O.
3. VERTICAL LOAD APPLIED WITH ONE HORIZONTAL LOAD AT A TIME.

All loading and design criteria supplied by customer is assumed accurate. Only the stated Design Assumptions were considered, and must be verified by the responsible Engineer of Record (EOR). The basis of Hilti component and connection design is the published data in the current Hilti Technical Guide, including material and cross-section properties, allowable load values, factors of safety, methods of calculation, and limiting factors. The EOR must verify suitability for any specific application, and the capacity of the supportive structure to receive the shown configuration and associated reaction loads. Modification to components and/or design may alter performance and must be evaluated by the EOR.

PROJECT NAME:

TYPICAL DETAILS

SERVICE REQUEST DESCRIPTION:

PIPING
TRAPEZE
CONCRETE

DESIGNED BY:	REVIEWED BY:
AJV	ISE
DRAWN BY:	ISSUE DATE:
HAM	02 DEC 2014

REVISIONS:

NO:	DESCRIPTION:	DATE:
A	ORIGINAL ISSUE	02 DEC 14

SERVICE REQUEST NUMBER:

TD-P-TR03-C

DRAWING NUMBER:	SHEET:
01	1/1

Maximum "H" (in)	Allowable Vertical Load (lbs)	Allowable Transverse Load (lbs)	Allowable Longitudinal Load (lbs)
48	3285	0	0
48	1416	425	0
48	1208	0	362
60	3285	0	0
60	1083	325	0
60	958	0	287
72	3285	0	0
72	916	275	0
72	750	0	225

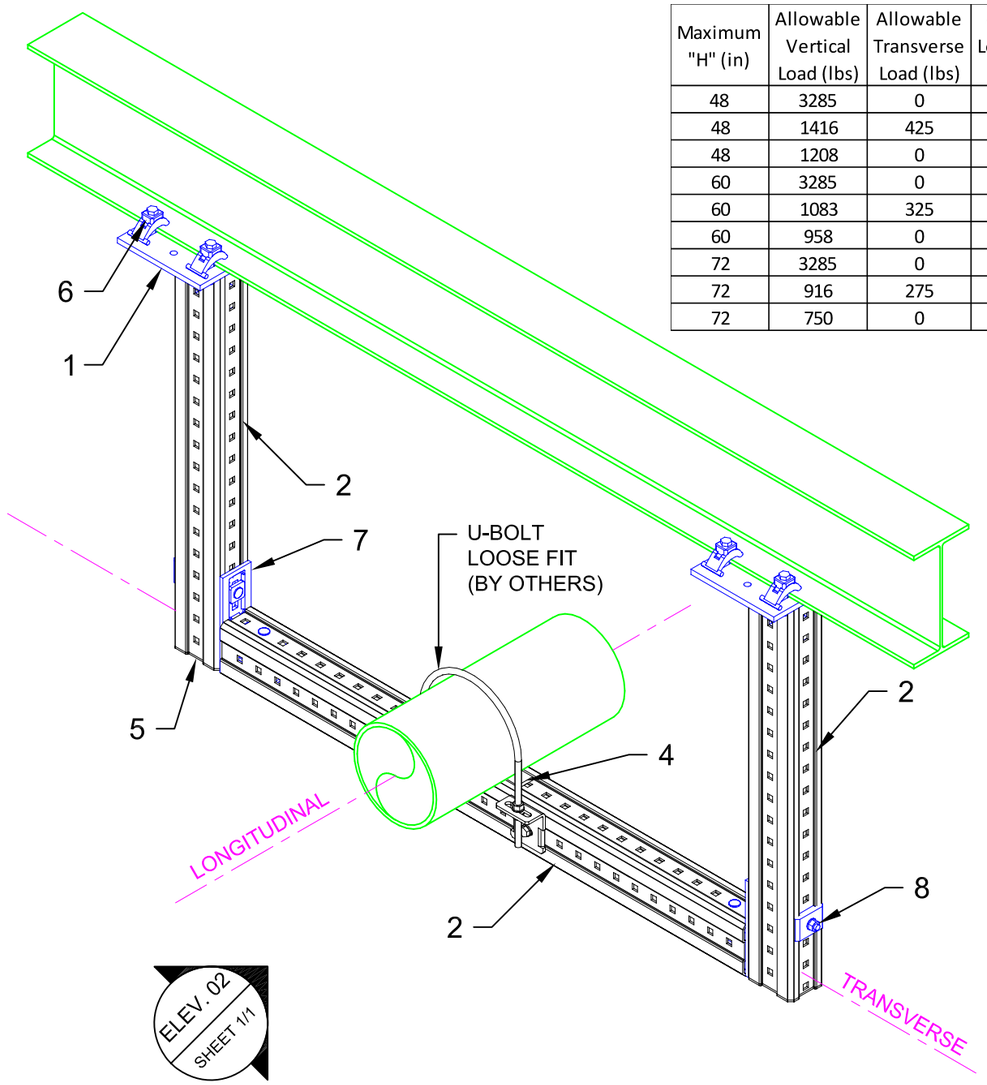

01 ISOMETRIC
N.T.S.

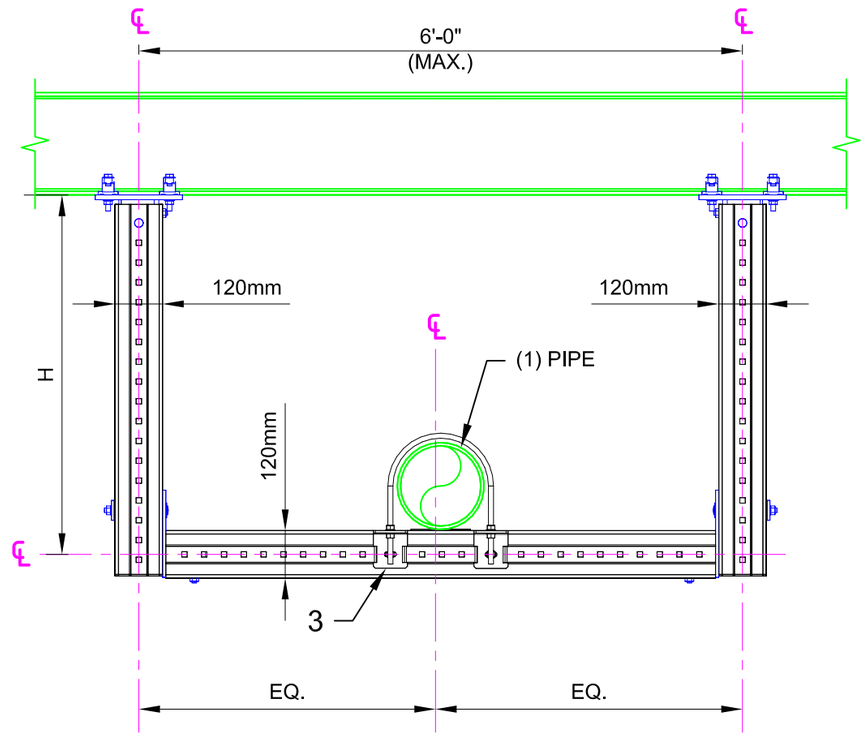

02 ELEVATION
N.T.S.

MIC-S120-X

Beam Width Table

X	'B' Width	Item No.
A	2.9 to 6.5	304818
B	6.5 to 9.2	304819
C	9.2 to 11.8	304820

No.	Unit Qty	Unit	Description	Box Qty	# Boxes Needed	Item No.
1	2	EA	CONNECTOR MIC-S120-X STEEL (SEE TABLE)	2	1	VARIES
2	AS REQ'D	EA	GIRDER MI-120 3M	1	AS REQ'D	304800
3	1	EA	CONNECTOR U-BOLT MIC-UB90-M16	6	1	304834
4	2	EA	CONNECTOR PIPE SHOE MIC-PG	10	1	304842
5	2	EA	GIRDER END CAP MIA-EC120	25	1	432078
6	8	EA	BEAM CLAMP MI-SGC-M12	16	1	233859
7	2	EA	CONNECTOR MIC-120-U	4	1	304804
8	2	EA	EASYHAND SCREW MIA-EH120	10	1	304888

NOTE(S):

1. ALLOWABLE LOADS CONSIDER APPROPRIATE LOAD FACTORS AND LOAD COMBINATIONS PER APPLICABLE CODES AND STANDARDS.
2. ALL LOADS ASSUMED TO ACT AT HORIZONTAL ℄ OF PIPE(S) WHICH ARE SITTING DIRECTLY ON TOP OF MI GIRDER, U.N.O.
3. VERTICAL LOAD APPLIED WITH ONE HORIZONTAL LOAD AT A TIME.

All loading and design criteria supplied by customer is assumed accurate. Only the stated Design Assumptions were considered, and must be verified by the responsible Engineer of Record (EOR). The basis of Hilti component and connection design is the published data in the current Hilti Technical Guide, including material and cross-section properties, allowable load values, factors of safety, methods of calculation, and limiting factors. The EOR must verify suitability for any specific application, and the capacity of the supportive structure to receive the shown configuration and associated reaction loads. Modification to components and/or design may alter performance and must be evaluated by the EOR.

PROJECT NAME:

TYPICAL DETAILS

SERVICE REQUEST DESCRIPTION:

PIPING
TRAPEZE
STEEL

DESIGNED BY:	REVIEWED BY:
AJV	ISE
DRAWN BY:	ISSUE DATE:
HAM	02 DEC 2014

REVISIONS:

NO:	DESCRIPTION:	DATE:
A	ORIGINAL ISSUE	02 DEC 14

SERVICE REQUEST NUMBER:

TD-P-TR03-S

DRAWING NUMBER:	SHEET:
01	1/1

Maximum "H" (in)	Allowable Vertical Load (lbs)	Allowable Transverse Load (lbs)	Allowable Longitudinal Load (lbs)
48	3285	0	0
48	2541	762	0
48	3125	0	937
60	3285	0	0
60	2541	762	0
60	3083	0	925
72	3285	0	0
72	2500	750	0
72	2416	0	725

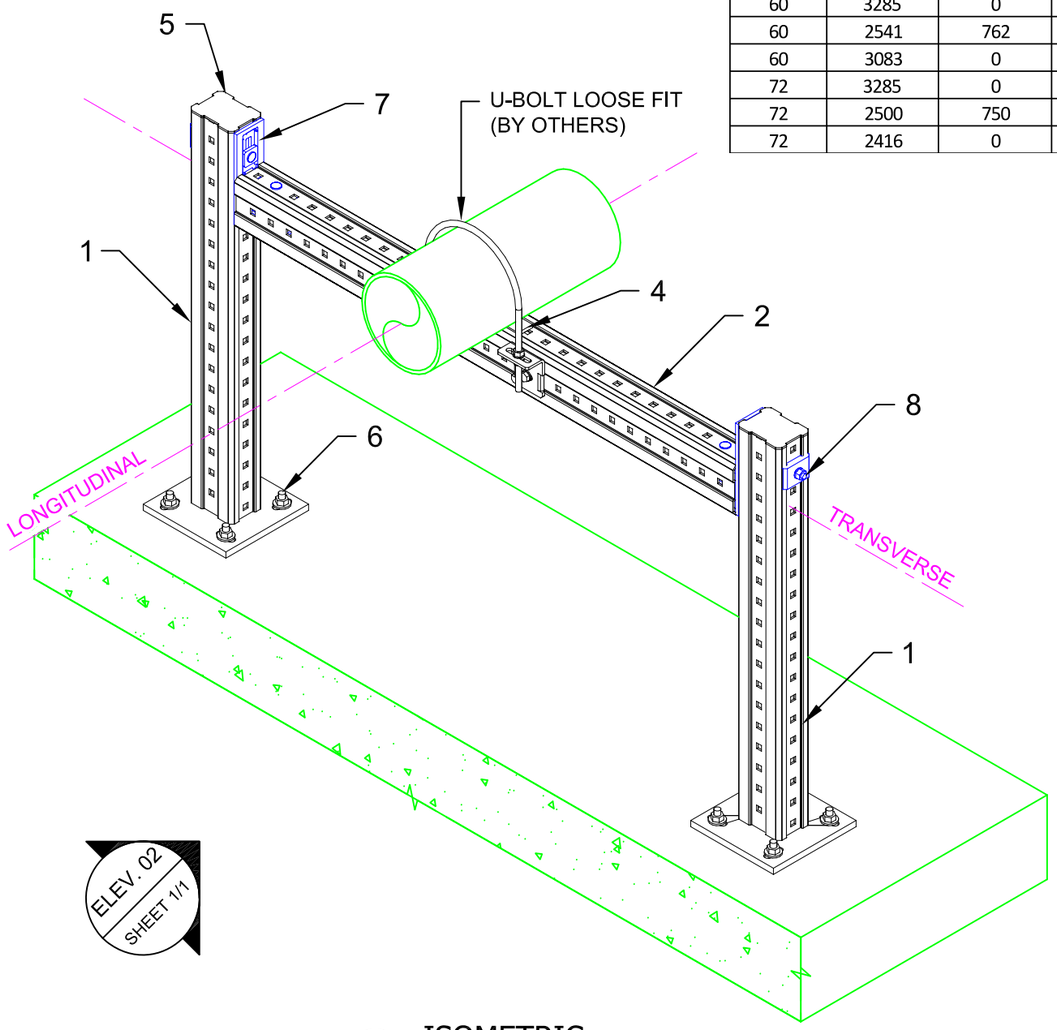

ELEV. 02
SHEET 1/1

01 ISOMETRIC
N.T.S.

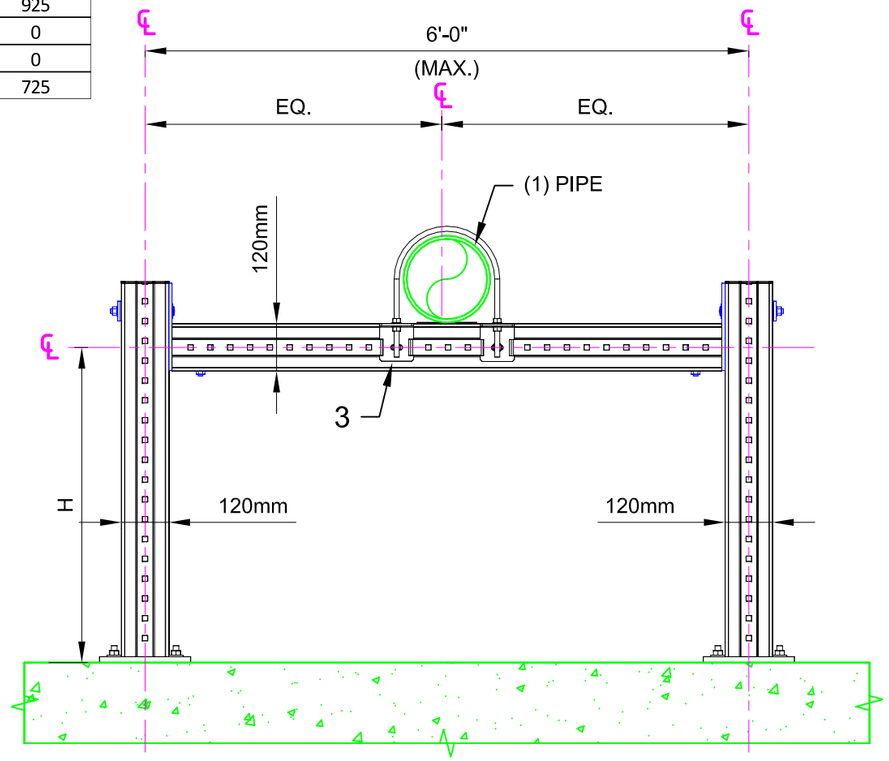

02 ELEVATION
N.T.S.

No.	Unit Qty	Unit	Description	Box Qty	# Boxes Needed	Item No.
1	2	EA	CONNECTOR MIC-C120-D-2000 WELDED BRACKET	1	2	270472
2	AS REQ'D	EA	GIRDER MI-120 3M	1	AS REQ'D	304800
3	1	EA	CONNECTOR U-BOLT MIC-UB90-M16	6	1	304834
4	2	EA	CONNECTOR PIPE SHOE MIC-PG	10	1	304842
5	2	EA	GIRDER END CAP MIA-EC120	25	1	432078
6	8	EA	USE KB3 OR KB-TZ AS APPROPRIATE	VARIES	VARIES	VARIES
7	2	EA	CONNECTOR MIC-120-U	4	1	304804
8	2	EA	EASYHAND SCREW MIA-EH120	10	1	304888

NOTE(S):

1. ALLOWABLE LOADS CONSIDER APPROPRIATE LOAD FACTORS AND LOAD COMBINATIONS PER APPLICABLE CODES AND STANDARDS.
2. ALL LOADS ASSUMED TO ACT AT HORIZONTAL ℄ OF PIPE(S) WHICH ARE SITTING DIRECTLY ON TOP OF MI GIRDER, U.N.O.
3. VERTICAL LOAD APPLIED WITH ONE HORIZONTAL LOAD AT A TIME.

All loading and design criteria supplied by customer is assumed accurate. Only the stated Design Assumptions were considered, and must be verified by the responsible Engineer of Record (EOR). The basis of Hilti component and connection design is the published data in the current Hilti Technical Guide, including material and cross-section properties, allowable load values, factors of safety, methods of calculation, and limiting factors. The EOR must verify suitability for any specific application, and the capacity of the supportive structure to receive the shown configuration and associated reaction loads. Modification to components and/or design may alter performance and must be evaluated by the EOR.

PROJECT NAME:

TYPICAL DETAILS

SERVICE REQUEST DESCRIPTION:

PIPING
GOALPOST
CONCRETE

DESIGNED BY:	REVIEWED BY:
AJV	ISE
DRAWN BY:	ISSUE DATE:
HAM	02 DEC 14

REVISIONS:

NO:	DESCRIPTION:	DATE:
A	ORIGINAL ISSUE	02 DEC 14

SERVICE REQUEST NUMBER:

TD-P-GP04-C

DRAWING NUMBER:	SHEET:
01	1/1

Maximum "H" (in)	Allowable Vertical Load (lbs)	Allowable Transverse Load (lbs)	Allowable Longitudinal Load (lbs)
48	3285	0	0
48	1416	425	0
48	1208	0	362
60	3285	0	0
60	1083	325	0
60	958	0	287
72	3285	0	0
72	916	275	0
72	750	0	225

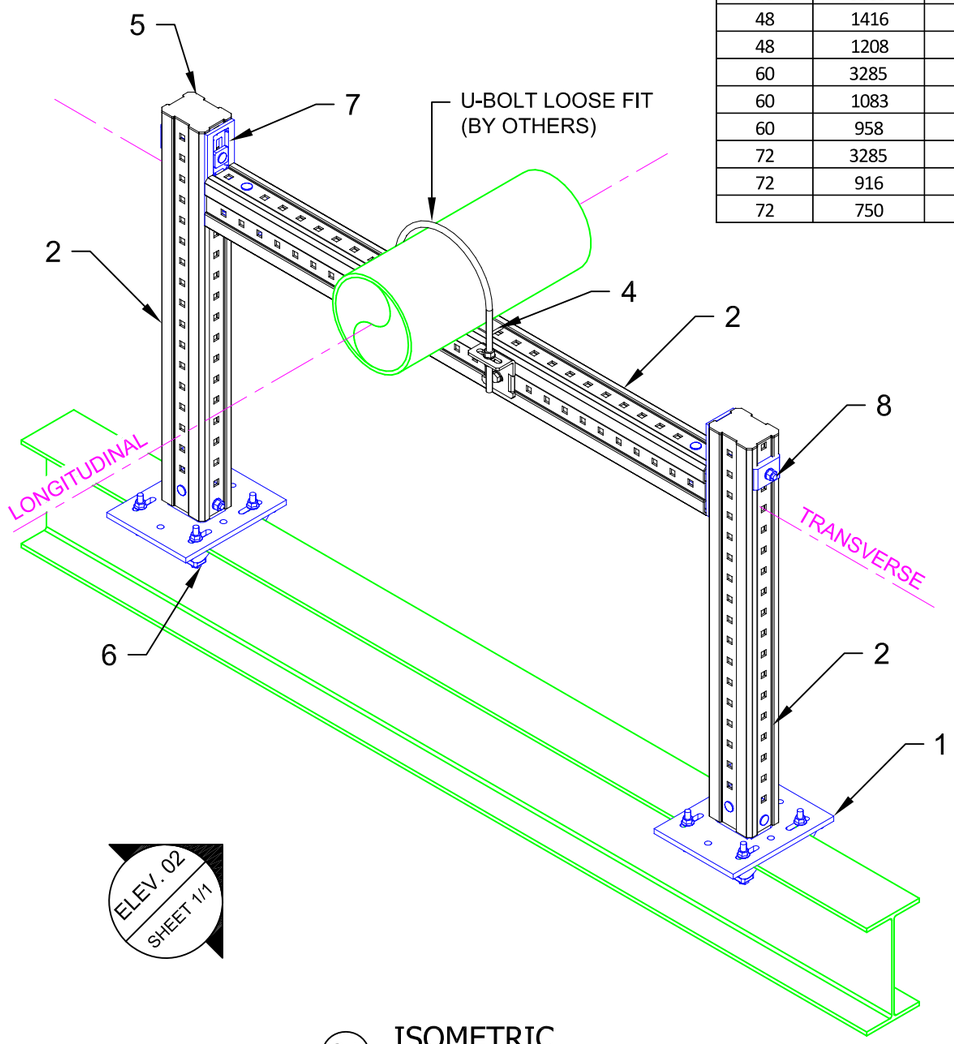

01 ISOMETRIC
N.T.S.

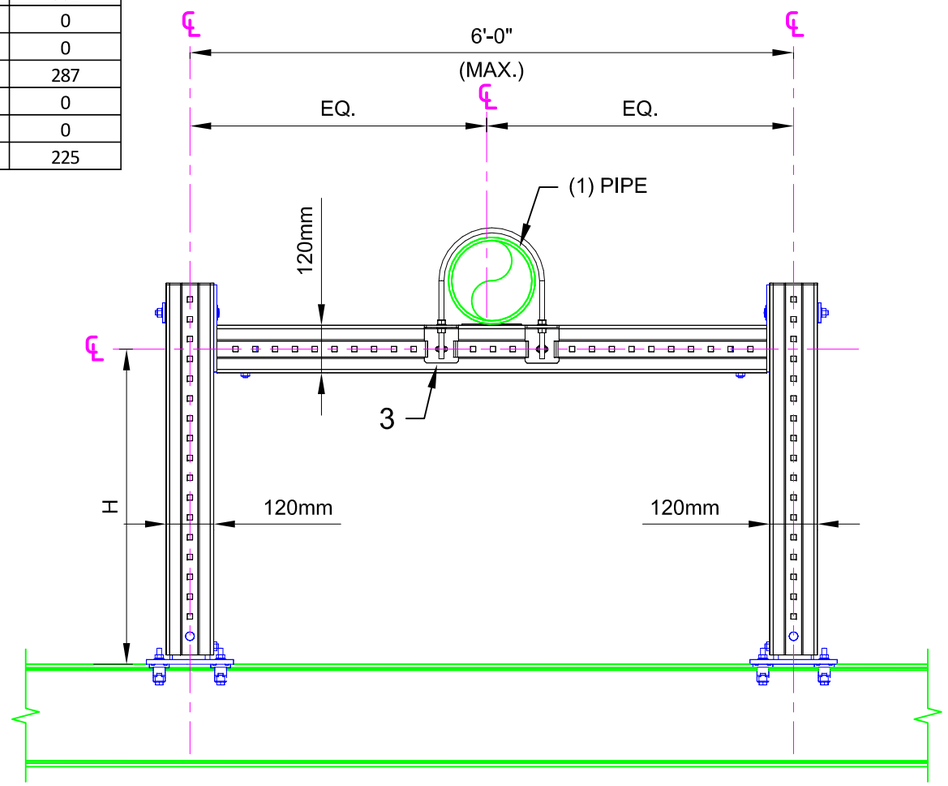

02 ELEVATION
N.T.S.

ELEV. 02
SHEET 1/1

MIC-S120-X

Beam Width Table

X	'B' Width	Item No.
A	2.9 to 6.5	304818
B	6.5 to 9.2	304819
C	9.2 to 11.8	304820

No.	Unit Qty	Unit	Description	Box Qty	# Boxes Needed	Item No.
1	2	EA	CONNECTOR MIC-S120-X STEEL (SEE TABLE)	2	1	VARIES
2	AS REQ'D	EA	GIRDER MI-120 3M	1	AS REQ'D	304800
3	1	EA	CONNECTOR U-BOLT MIC-UB90-M16	6	1	304834
4	2	EA	CONNECTOR PIPE SHOE MIC-PG	10	1	304842
5	2	EA	GIRDER END CAP MIA-EC120	25	1	432078
6	8	EA	BEAM CLAMP MI-SGC-M12	16	1	233859
7	2	EA	CONNECTOR MIC-120-U	4	1	304804
8	2	EA	EASYHAND SCREW MIA-EH120	10	1	304888

NOTE(S):

1. ALLOWABLE LOADS CONSIDER APPROPRIATE LOAD FACTORS AND LOAD COMBINATIONS PER APPLICABLE CODES AND STANDARDS.
2. ALL LOADS ASSUMED TO ACT AT HORIZONTAL ℄ OF PIPE(S) WHICH ARE SITTING DIRECTLY ON TOP OF MI GIRDER, U.N.O.
3. VERTICAL LOAD APPLIED WITH ONE HORIZONTAL LOAD AT A TIME.

All loading and design criteria supplied by customer is assumed accurate. Only the stated Design Assumptions were considered, and must be verified by the responsible Engineer of Record (EOR). The basis of Hilti component and connection design is the published data in the current Hilti Technical Guide, including material and cross-section properties, allowable load values, factors of safety, methods of calculation, and limiting factors. The EOR must verify suitability for any specific application, and the capacity of the supportive structure to receive the shown configuration and associated reaction loads. Modification to components and/or design may alter performance and must be evaluated by the EOR.

PROJECT NAME:

TYPICAL DETAILS

SERVICE REQUEST DESCRIPTION:

PIPING
GOALPOST
STEEL

DESIGNED BY:	REVIEWED BY:
AJV	ISE
DRAWN BY:	ISSUE DATE:
HAM	02 DEC 14

REVISIONS:

NO:	DESCRIPTION:	DATE:
A	ORIGINAL ISSUE	02 DEC 14

SERVICE REQUEST NUMBER:

TD-P-GP04-S

DRAWING NUMBER:	SHEET:
01	1/1

Maximum"L1" (in)	Allowable Vertical Load (lbs)	Allowable Transverse Load (lbs)	Allowable Longitudinal Load (lbs)
48	641	0	0
48	641	192	0
48	583	0	175
60	464	0	0
60	464	139	0
60	416	0	125
72	357	0	0
72	357	107	0
72	333	0	100

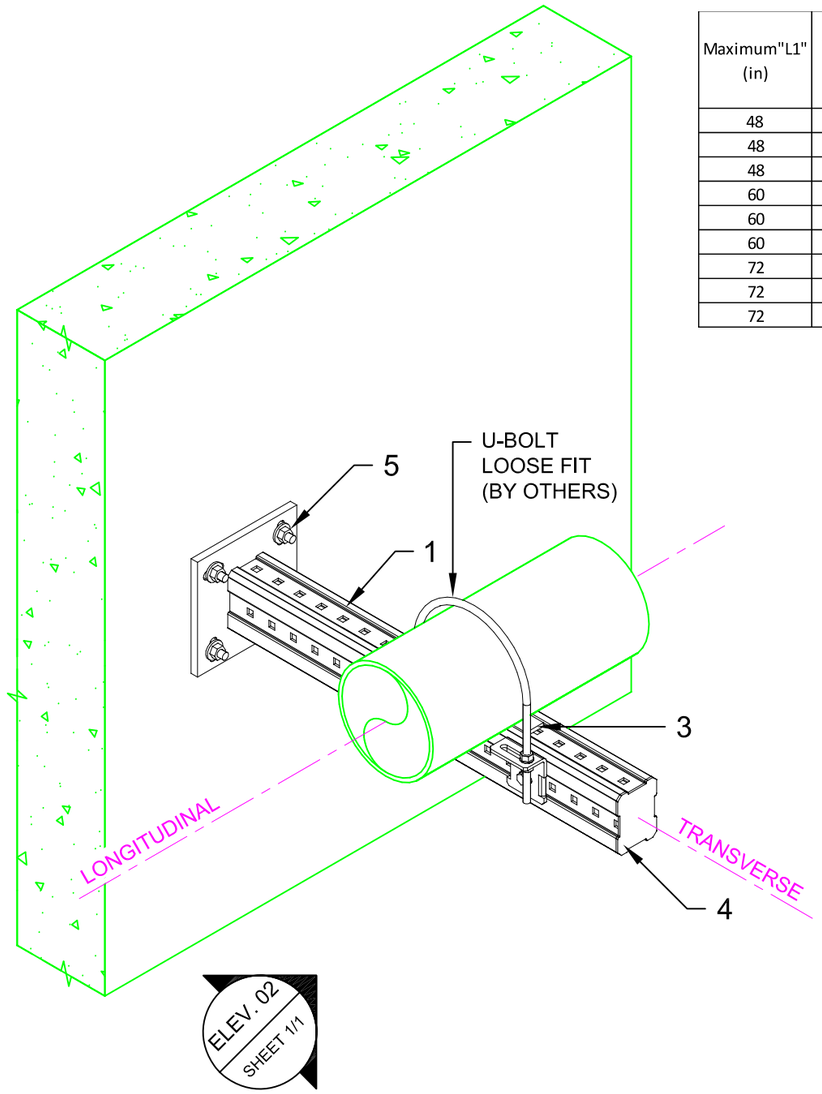

01 ISOMETRIC
N.T.S.

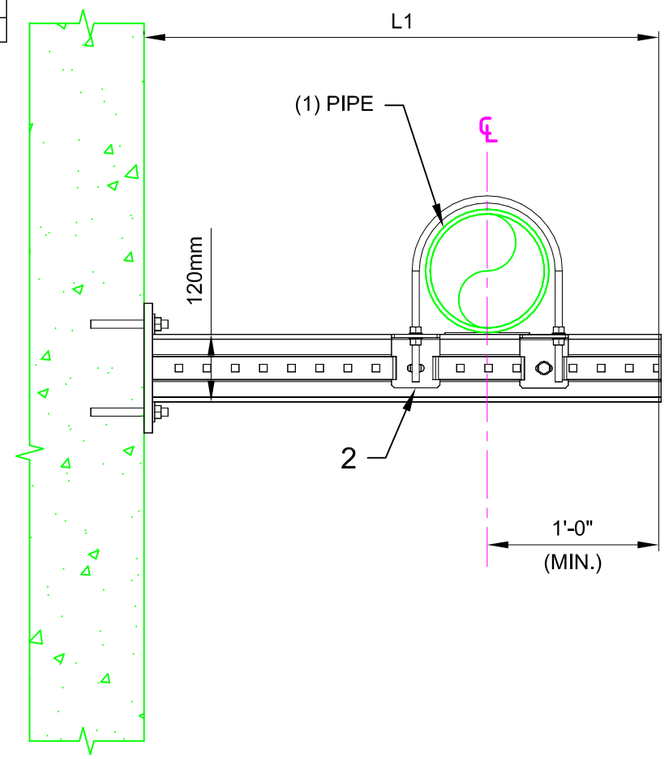

02 ELEVATION
N.T.S.

No.	Unit Qty	Unit	Description	Box Qty	# Boxes Needed	Item No.
1	1	EA	CONNECTOR MIC-C120-D-2000 WELDED BRACKET	1	1	270472
2	1	EA	CONNECTOR U-BOLT MIC-UB90-M16	6	1	304834
3	1	EA	CONNECTOR PIPE SHOE MIC-PG	10	1	304842
4	1	EA	GIRDER END CAP MIA-EC120	25	1	432078
5	5	EA	USE KB3 OR KB-TZ AS APPROPRIATE	VARIES	VARIES	VARIES

NOTE(S):

1. ALLOWABLE LOADS CONSIDER APPROPRIATE LOAD FACTORS AND LOAD COMBINATIONS PER APPLICABLE CODES AND STANDARDS.
2. ALL LOADS ASSUMED TO ACT AT HORIZONTAL ℄ OF PIPE(S) WHICH ARE SITTING DIRECTLY ON TOP OF MI GIRDER, U.N.O.
3. VERTICAL LOAD APPLIED WITH ONE HORIZONTAL LOAD AT A TIME.

All loading and design criteria supplied by customer is assumed accurate. Only the stated Design Assumptions were considered, and must be verified by the responsible Engineer of Record (EOR). The basis of Hilti component and connection design is the published data in the current Hilti Technical Guide, including material and cross-section properties, allowable load values, factors of safety, methods of calculation, and limiting factors. The EOR must verify suitability for any specific application, and the capacity of the supportive structure to receive the shown configuration and associated reaction loads. Modification to components and/or design may alter performance and must be evaluated by the EOR.

PROJECT NAME:

TYPICAL DETAILS

SERVICE REQUEST DESCRIPTION:

PIPING
CANTILEVER
CONCRETE

DESIGNED BY:	REVIEWED BY:
AJV	ISE
DRAWN BY:	ISSUE DATE:
HAM	02 DEC 14

REVISIONS:

NO:	DESCRIPTION:	DATE:
A	ORIGINAL ISSUE	02 DEC 14

SERVICE REQUEST NUMBER:

TD-P-C05-C

DRAWING NUMBER:	SHEET:
01	1/1

Maximum"L1" (in)	Allowable Vertical Load (lbs)	Allowable Transverse Load (lbs)	Allowable Longitudinal Load (lbs)
48	214	0	0
48	214	64	0
48	214	0	64
60	142	0	0
60	142	42	0
60	142	0	42
72	107	0	0
72	107	32	0
72	107	0	32

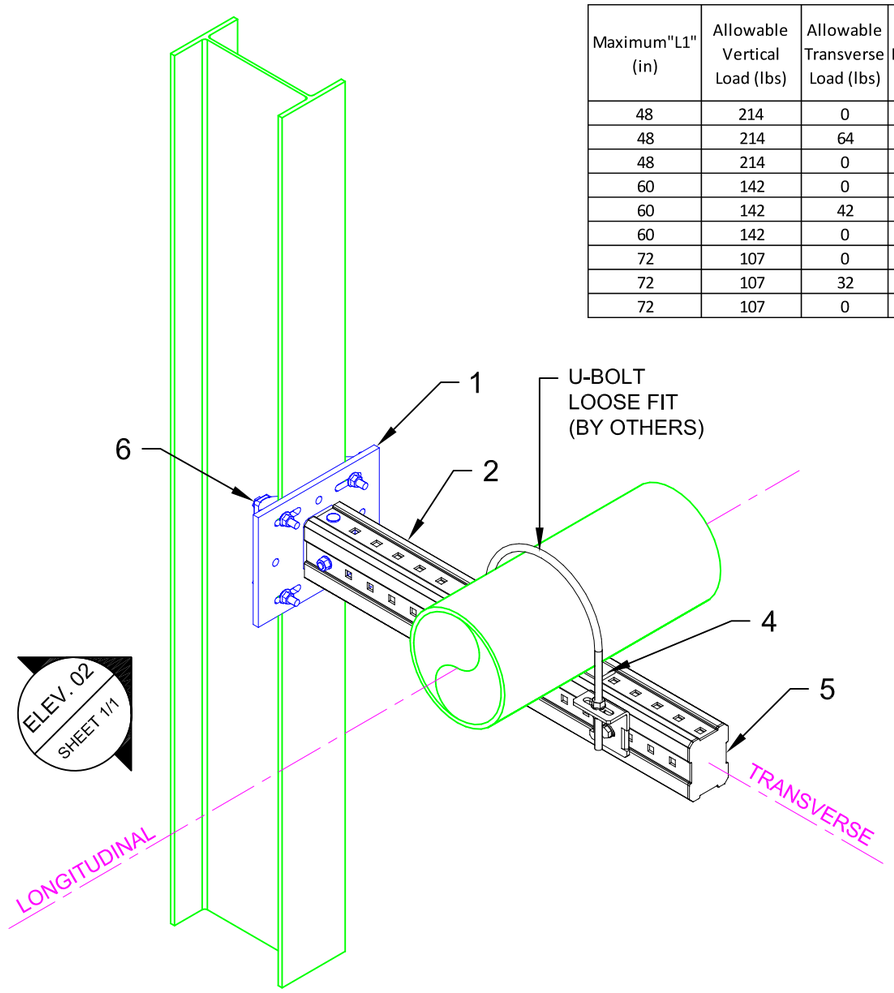

01 ISOMETRIC
N.T.S.

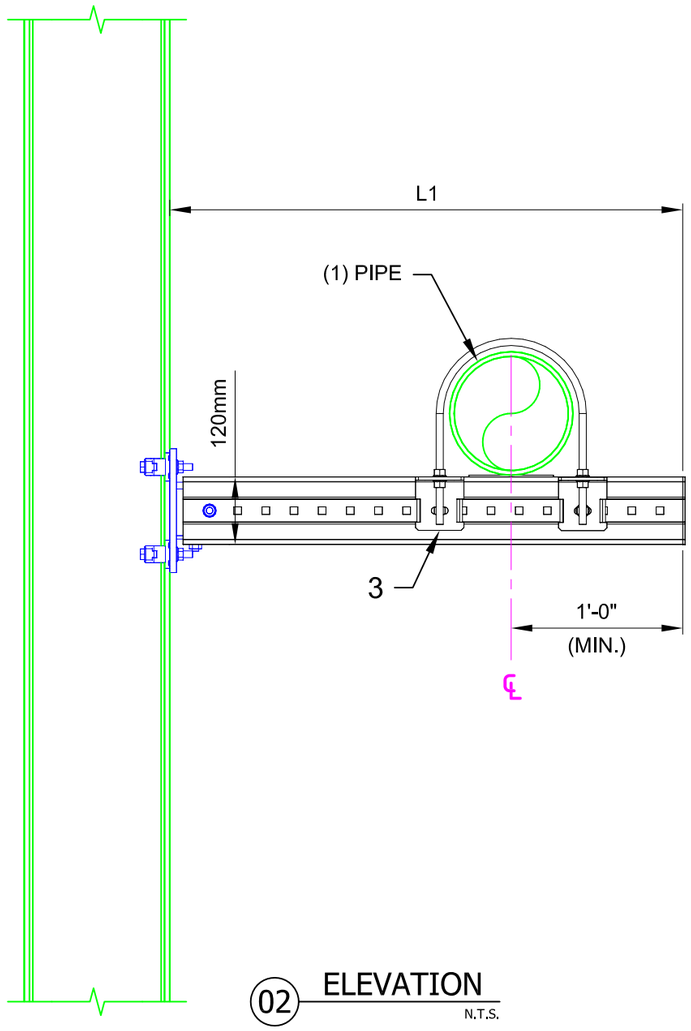

02 ELEVATION
N.T.S.

MIC-S120-X

Beam Width Table

X	'B' Width	Item No.
A	2.9 to 6.5	304818
B	6.5 to 9.2	304819
C	9.2 to 11.8	304820

MIC-SX-MA

Beam Width Table

X	'B' Width	Item No.
A	2.9 to 6.5	304815
B	6.5 to 9.2	304816
C	9.2 to 11.8	304817

No.	Unit Qty	Unit	Description	Box Qty	# Boxes Needed	Item No.
1	2	EA	CONNECTOR MIC-S120-X STEEL (SEE TABLE)	2	1	VARIES
2	AS REQ'D	EA	GIRDER MI-120 3M	1	AS REQ'D	304800
3	1	EA	CONNECTOR U-BOLT MIC-UB90-M16	6	1	304834
4	2	EA	CONNECTOR PIPE SHOE MIC-PG	10	1	304842
5	2	EA	GIRDER END CAP MIA-EC120	25	1	432078
6	8	EA	BEAM CLAMP MI-SGC-M12	16	1	233859

NOTE(S):

1. ALLOWABLE LOADS CONSIDER APPROPRIATE LOAD FACTORS AND LOAD COMBINATIONS PER APPLICABLE CODES AND STANDARDS.
2. ALL LOADS ASSUMED TO ACT AT HORIZONTAL ℄ OF PIPE(S) WHICH ARE SITTING DIRECTLY ON TOP OF MI GIRDER, U.N.O.
3. VERTICAL LOAD APPLIED WITH ONE HORIZONTAL LOAD AT A TIME.

All loading and design criteria supplied by customer is assumed accurate. Only the stated Design Assumptions were considered, and must be verified by the responsible Engineer of Record (EOR). The basis of Hilti component and connection design is the published data in the current Hilti Technical Guide, including material and cross-section properties, allowable load values, factors of safety, methods of calculation, and limiting factors. The EOR must verify suitability for any specific application, and the capacity of the supportive structure to receive the shown configuration and associated reaction loads. Modification to components and/or design may alter performance and must be evaluated by the EOR.

PROJECT NAME:

TYPICAL DETAILS

SERVICE REQUEST DESCRIPTION:

PIPING CANTILEVER STEEL

DESIGNED BY: AJV

REVIEWED BY: ISE

DRAWN BY: HAM

ISSUE DATE: 02 DEC 14

REVISIONS:

NO:	DESCRIPTION:	DATE:
A	ORIGINAL ISSUE	02 DEC 14

SERVICE REQUEST NUMBER:

TD-P-C05-S

DRAWING NUMBER: 01

SHEET: 1/1

Maximum Pipe Diameter (in)	Allowable Vertical Load (lbs)	Allowable Transverse Load (lbs)	Allowable Longitudinal Load (lbs)	Maximum"H" (in)
4	163	0	0	72
4	163	24	0	72
4	163	0	24	42
8	501	0	0	60
8	501	75	0	60
12	1021	0	0	42
12	1021	153	0	42
16	1595	0	0	36
16	1595	239	0	36

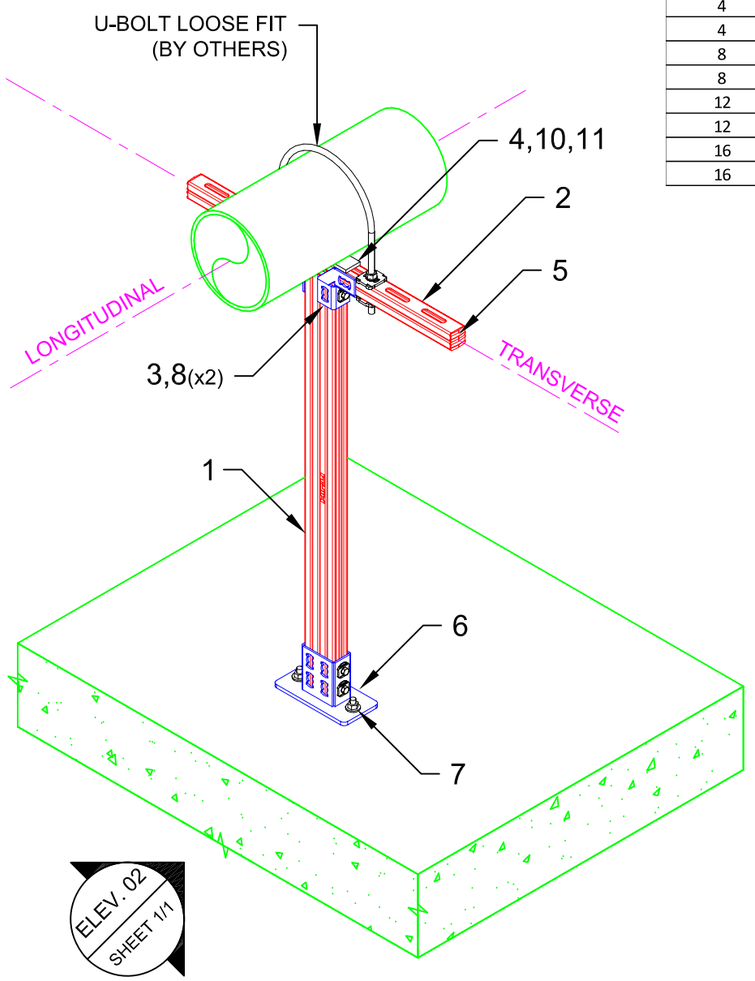

01 ISOMETRIC
N.T.S.

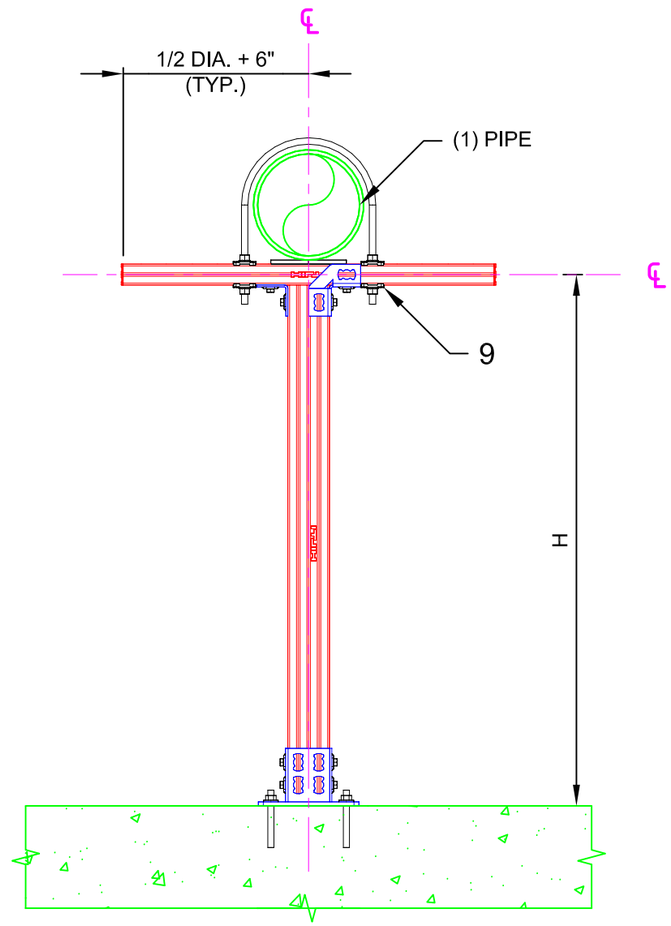

02 ELEVATION
N.T.S.

No.	Unit Qty	Unit	Description	Box Qty	# Boxes Needed	Item No.
1	AS REQ'D	EA	STRUT HS-158-12/HDG 10' B2B	1	AS REQ'D	2007087
2	AS REQ'D	EA	STRUT HS-158-12/HDG 10'	1	AS REQ'D	407570
3	8	EA	CHANNEL CONNECTOR MQN-HDG PLUS	50	1	387779
4	2	EA	CONNECTOR PIPE SHOE MIC-PG	10	1	304842
5	4	EA	CHANNEL END CAP MEK RED	50	1	244886
6	1	EA	RAIL SUPPORT MQP-82	8	1	369652
7	2	EA	USE KB3 OR KB-TZ AS APPROPRIATE	VARIES	VARIES	VARIES
8	2	EA	4-HOLE ANGLE MQW-4	10	1	369658
9	4	EA	BASE PLATE MQZ-L1/2"	20	1	370633
10	2	EA	3/8" CHANNEL NUT/NO SPRING 100/BOX	100	1	311937
11	2	EA	COUNTERSUNK BOLT 3/8 X 1	VARIES	VARIES	SPECIAL

NOTE(S):

1. REFER TO TABLE FOR DIMENSIONAL LIMITATIONS BASED ON PIPE DIAMETER.
2. ALLOWABLE LOADS CONSIDER APPROPRIATE LOAD FACTORS AND LOAD COMBINATIONS PER APPLICABLE CODES AND STANDARDS.
3. ALL LOADS ASSUMED TO ACT AT HORIZONTAL ℄ OF PIPE(S) WHICH ARE SITTING DIRECTLY ON TOP OF HS STRUT, U.N.O.
4. VERTICAL LOAD APPLIED WITH ONE HORIZONTAL LOAD AT A TIME.
5. PIPE HORIZONTAL OFFSET FROM HS POST ℄ = 0"
6. ABOVE LOADING BASED ON SCH. 40 PIPE FILLED WITH WATER.
7. MAX. SUPPORT SPACING = 10'-0".

All loading and design criteria supplied by customer is assumed accurate. Only the stated Design Assumptions were considered, and must be verified by the responsible Engineer of Record (EOR). The basis of Hilti component and connection design is the published data in the current Hilti Technical Guide, including material and cross-section properties, allowable load values, factors of safety, methods of calculation, and limiting factors. The EOR must verify suitability for any specific application, and the capacity of the supportive structure to receive the shown configuration and associated reaction loads. Modification to components and/or design may alter performance and must be evaluated by the EOR.

PROJECT NAME:

TYPICAL DETAILS

SERVICE REQUEST DESCRIPTION:

PIPING
T-POST (MQ)
CONCRETE

DESIGNED BY:	REVIEWED BY:
AJV	ISE
DRAWN BY:	ISSUE DATE:
HAM	19 FEB 15

REVISIONS:

NO:	DESCRIPTION:	DATE:
A	ORIGINAL ISSUE	19 FEB 15

SERVICE REQUEST NUMBER:

TD-P-TP51-C

DRAWING NUMBER:	SHEET:
01	1/1

Maximum Pipe Diameter (in)	Allowable Vertical Load (lbs)	Allowable Transverse Load (lbs)	Allowable Longitudinal Load (lbs)	Maximum"H" (in)
4	163	0	0	72
4	163	24	0	72
4	163	0	24	42
8	501	0	0	60
8	501	75	0	60
12	1021	0	0	42
12	1021	153	0	42
16	1595	0	0	36
16	1595	239	0	36

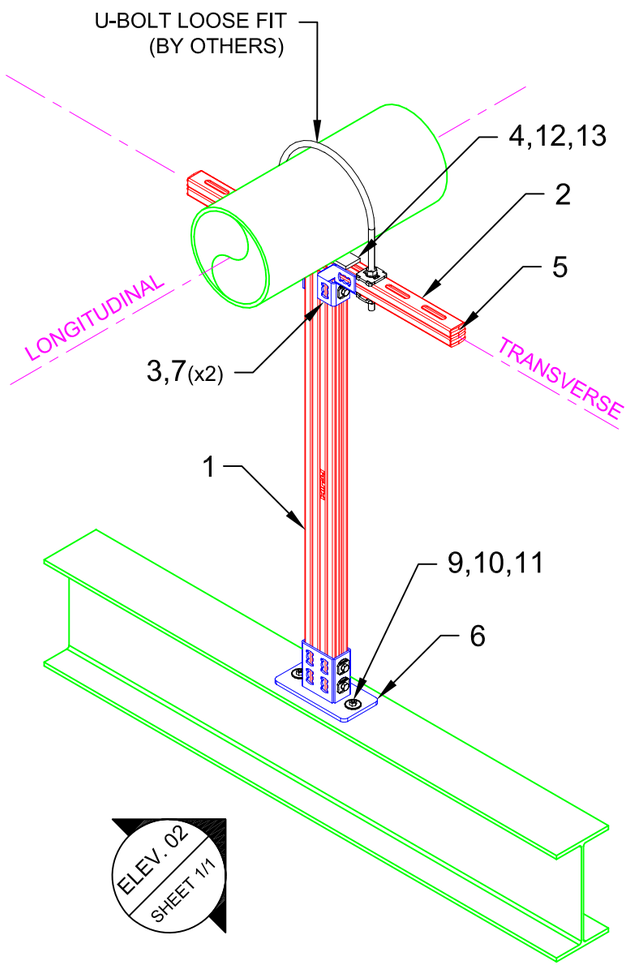

01 ISOMETRIC
N.T.S.

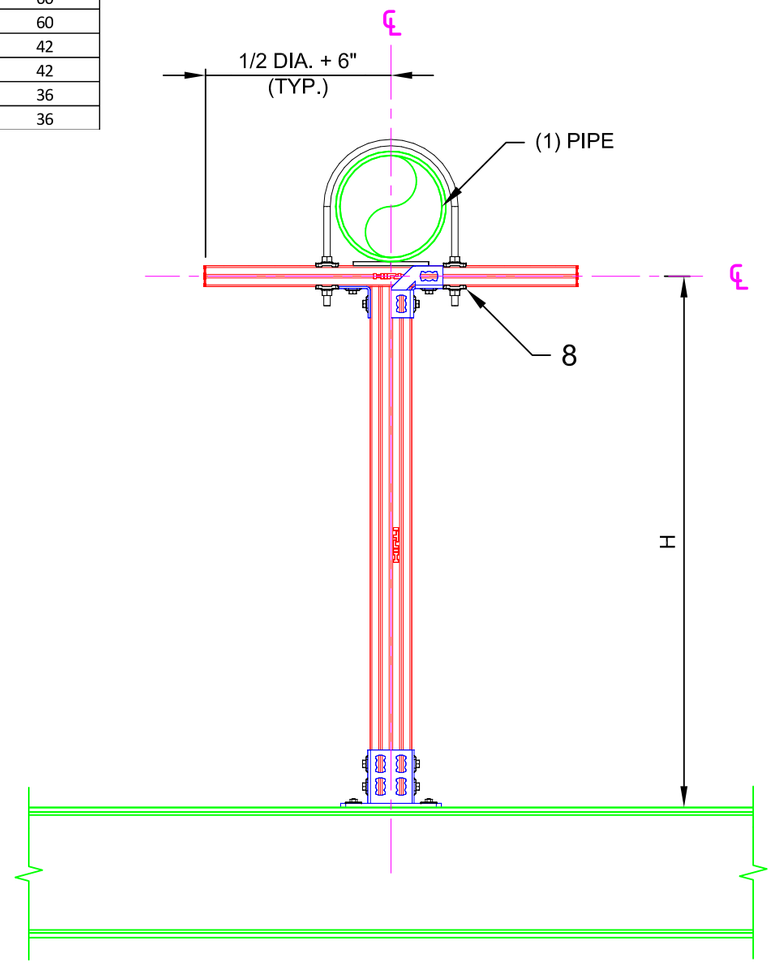

02 ELEVATION
N.T.S.

No.	Unit Qty	Unit	Description	Box Qty	# Boxes Needed	Item No.
1	AS REQ'D	EA	STRUT HS-158-12/HDG 10' B2B	1	AS REQ'D	2007087
2	AS REQ'D	EA	STRUT HS-158-12/HDG 10'	1	AS REQ'D	407570
3	8	EA	CHANNEL CONNECTOR MQN-HDG PLUS	50	1	387779
4	2	EA	CONNECTOR PIPE SHOE MIC-PG	10	1	304842
5	4	EA	CHANNEL END CAP MEK RED	50	1	244886
6	1	EA	RAIL SUPPORT MQP-82	8	1	369652
7	2	EA	4-HOLE ANGLE MQW-4	10	1	369658
8	4	EA	BASE PLATE MQZ-L1/2"	20	1	370633
9	2	EA	X-BTW10-24-6 SN12-R	100	1	377076
10	2	EA	HEX NUT-HEAVY DUTY 3/8"	100	1	411752
11	2	EA	WASHER 3/8"	200	1	411757
12	2	EA	3/8" CHANNEL NUT/NO SPRING 100/BOX	100	1	311937
13	2	EA	COUNTERSUNK BOLT 3/8 X 1	VARIES	AS REQ'D	SPECIAL

NOTE(S):

1. REFER TO TABLE FOR DIMENSIONAL LIMITATIONS BASED ON PIPE DIAMETER.
2. ALLOWABLE LOADS CONSIDER APPROPRIATE LOAD FACTORS AND LOAD COMBINATIONS PER APPLICABLE CODES AND STANDARDS.
3. ALL LOADS ASSUMED TO ACT AT HORIZONTAL ℄ OF PIPE(S) WHICH ARE SITTING DIRECTLY ON TOP OF HS STRUT, U.N.O.
4. VERTICAL LOAD APPLIED WITH ONE HORIZONTAL LOAD AT A TIME.
5. PIPE HORIZONTAL OFFSET FROM HS POST ℄ = 0"
6. ABOVE LOADING BASED ON SCH. 40 PIPE FILLED WITH WATER.
7. MAX. SUPPORT SPACING = 10'-0".

All loading and design criteria supplied by customer is assumed accurate. Only the stated Design Assumptions were considered, and must be verified by the responsible Engineer of Record (EOR). The basis of Hilti component and connection design is the published data in the current Hilti Technical Guide, including material and cross-section properties, allowable load values, factors of safety, methods of calculation, and limiting factors. The EOR must verify suitability for any specific application, and the capacity of the supportive structure to receive the shown configuration and associated reaction loads. Modification to components and/or design may alter performance and must be evaluated by the EOR.

PROJECT NAME:

TYPICAL DETAILS

SERVICE REQUEST DESCRIPTION:

PIPING
T-POST (MQ)
STEEL

DESIGNED BY:	REVIEWED BY:
AJV	ISE
DRAWN BY:	ISSUE DATE:
HAM	19 FEB 15

REVISIONS:

NO:	DESCRIPTION:	DATE:
A	ORIGINAL ISSUE	19 FEB 15

SERVICE REQUEST NUMBER:

TD-P-TP51-S

DRAWING NUMBER:	SHEET:
01	1/1

Maximum Pipe Diameter (in)	Allowable Vertical Load (lbs)	Allowable Transverse Load (lbs)	Allowable Longitudinal Load (lbs)
4	163	0	0
4	163	24	0
4	163	0	24
8	501	0	0
8	501	75	0
8	501	0	75

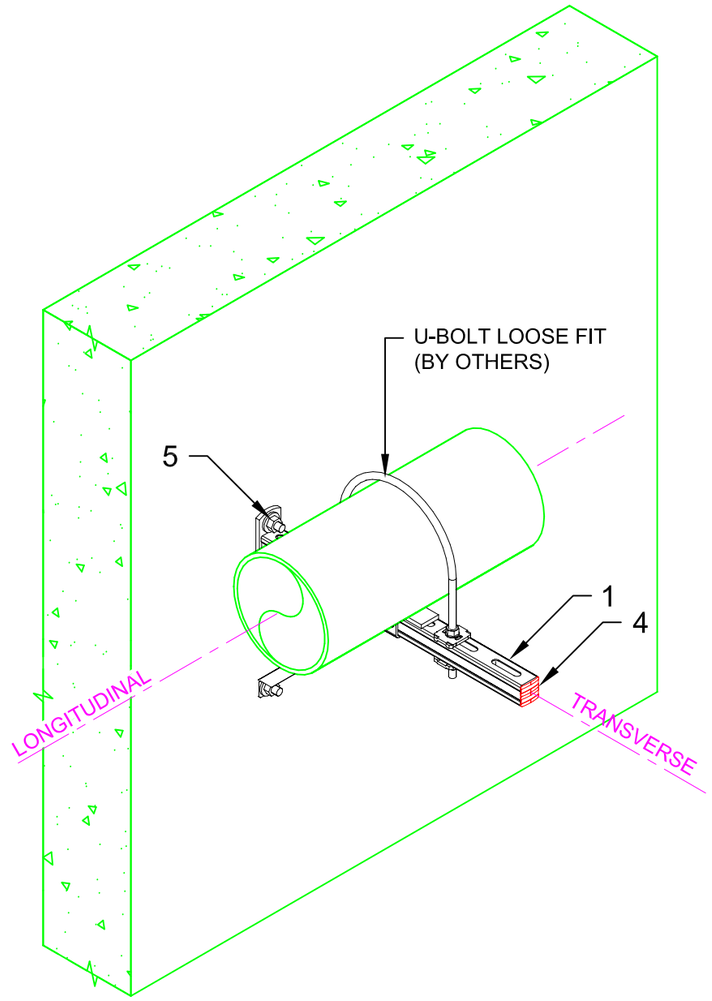

ELEV. 02
SHEET 1/1

01 ISOMETRIC
N.T.S.

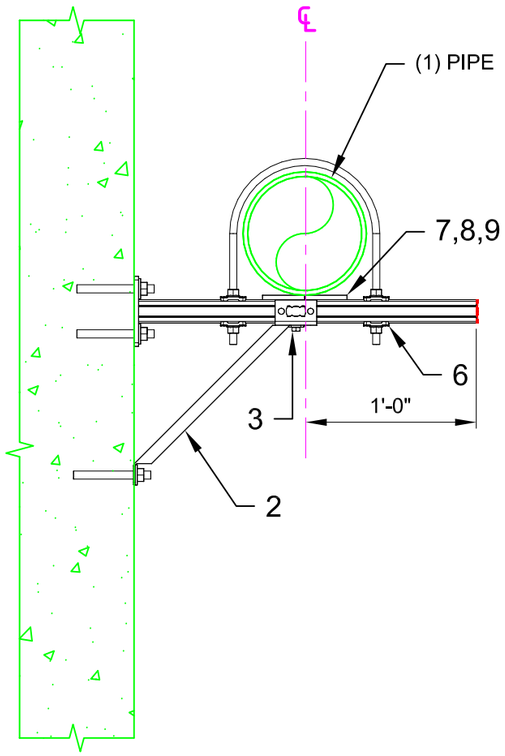

02 ELEVATION
N.T.S.

No.	Unit Qty	Unit	Description	Box Qty	# Boxes Needed	Item No.
1	1	EA	BRACKET MQK-41/600-F	1	1	304117
2	1	EA	ANGLE BRACE MQK-SK-F	10	1	304129
3	1	EA	CHANNEL CONNECTOR MQN-HDG PLUS	50	1	387779
4	2	EA	CHANNEL END CAP MEK RED	50	1	244886
5	3	EA	USE KB3 OR KB-TZ AS APPROPRIATE	VARIES	VARIES	VARIES
6	2	EA	BASE PLATE MQZ-L1/2"	20	1	370633
7	2	EA	CONNECTOR PIPE SHOE MIC-PG	10	1	304842
8	2	EA	3/8" CHANNEL NUT/NO SPRING 100/BOX	100	1	311937
9	2	EA	COUNTERSUNK BOLT 3/8 X 1	VARIES	VARIES	SPECIAL

NOTE(S):

1. REFER TO TABLE FOR DIMENSIONAL LIMITATIONS BASED ON PIPE DIAMETER.
2. ALLOWABLE LOADS CONSIDER APPROPRIATE LOAD FACTORS AND LOAD COMBINATIONS PER APPLICABLE CODES AND STANDARDS.
3. ALL LOADS ASSUMED TO ACT AT HORIZONTAL ℄ OF PIPE(S) WHICH ARE SITTING DIRECTLY ON TOP OF HS STRUT, U.N.O.
4. VERTICAL LOAD APPLIED WITH ONE HORIZONTAL LOAD AT A TIME.
5. MAX. SUPPORT SPACING = 10'-0"
6. ABOVE LOADING BASED ON SCH. 40 PIPE FILLED WITH WATER

All loading and design criteria supplied by customer is assumed accurate. Only the stated Design Assumptions were considered, and must be verified by the responsible Engineer of Record (EOR). The basis of Hilti component and connection design is the published data in the current Hilti Technical Guide, including material and cross-section properties, allowable load values, factors of safety, methods of calculation, and limiting factors. The EOR must verify suitability for any specific application, and the capacity of the supportive structure to receive the shown configuration and associated reaction loads. Modification to components and/or design may alter performance and must be evaluated by the EOR.

PROJECT NAME:

TYPICAL DETAILS

SERVICE REQUEST DESCRIPTION:

PIPING
BRACED CANTILEVER (MQ)
CONCRETE

DESIGNED BY:	REVIEWED BY:
AJV	ISE
DRAWN BY:	ISSUE DATE:
HAM	19 FEB 15

REVISIONS:

NO:	DESCRIPTION:	DATE:
A	ORIGINAL ISSUE	19 FEB 15

SERVICE REQUEST NUMBER:

TD-P-BC52-C

DRAWING NUMBER:	SHEET:
01	1/1

Maximum Pipe Diameter (in)	Allowable Vertical Load (lbs)	Allowable Transverse Load (lbs)	Allowable Longitudinal Load (lbs)
4	163	0	0
4	163	24	0
4	163	0	24
8	501	0	0
8	501	75	0
8	501	0	75

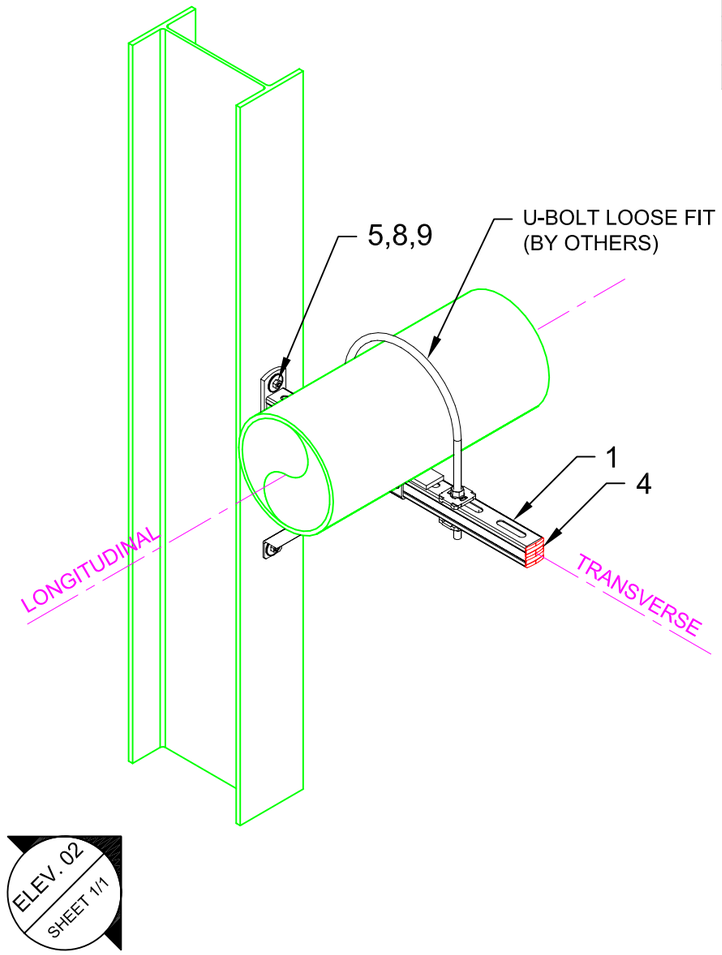

01 ISOMETRIC
N.T.S.

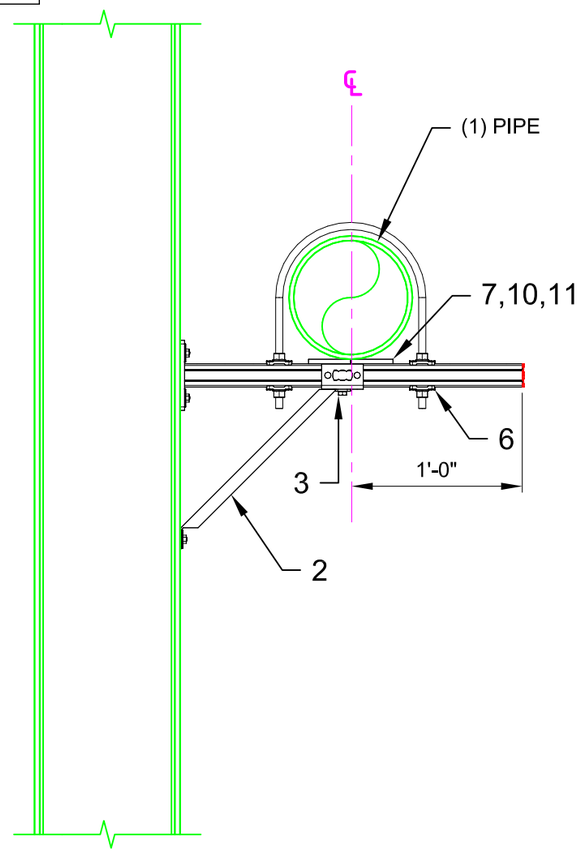

02 ELEVATION
N.T.S.

No.	Unit Qty	Unit	Description	Box Qty	# Boxes Needed	Item No.
1	AS REQ'D	EA	STRUT HS-158-12/HDG 10' B2B	1	AS REQ'D	2007087
2	2	EA	RAIL SUPPORT MQP-82	8	1	369652
3	2	EA	8-HOLE ANGLE MQW-8/90-F	10	1	304175
4	8	EA	CHANNEL END CAP MEK RED	50	1	244886
5	16	EA	CHANNEL CONNECTOR MQN-HDG PLUS	50	1	387779
6	4	EA	USE KB-TZ AS APPROPRIATE	VARIES	VARIES	VARIES
7	2	EA	CONNECTOR PIPE SHOE MIC-PG	10	1	304842
8	2	EA	MQV-UB (SPECIAL #304884)	VARIES	VARIES	SPECIAL
9	2	EA	HEX HEAD BOLT 1/2" x 1-1/4"	50	1	411767
10	2	EA	WASHER 1/2"	100	1	411758
11	2	EA	WING NUT MQM-F1/2"-F	25	1	304137
12	2	EA	3/8" CHANNEL NUT/NO SPRING 100/BOX	100	1	311937
13	2	EA	COUNTERSUNK BOLT 3/8 X 1	VARIES	VARIES	SPECIAL

NOTE(S):

1. REFER TO TABLE FOR DIMENSIONAL LIMITATIONS BASED ON PIPE DIAMETER.
2. ALLOWABLE LOADS CONSIDER APPROPRIATE LOAD FACTORS AND LOAD COMBINATIONS PER APPLICABLE CODES AND STANDARDS.
3. ALL LOADS ASSUMED TO ACT AT HORIZONTAL ℄ OF PIPE(S) WHICH ARE SITTING DIRECTLY ON TOP OF HS STRUT, U.N.O.
4. VERTICAL LOAD APPLIED WITH ONE HORIZONTAL LOAD AT A TIME.
5. MAX. SUPPORT SPACING = 10'-0"
6. ABOVE LOADING BASED ON SCH. 40 PIPE FILLED WITH WATER

All loading and design criteria supplied by customer is assumed accurate. Only the stated Design Assumptions were considered, and must be verified by the responsible Engineer of Record (EOR). The basis of Hilti component and connection design is the published data in the current Hilti Technical Guide, including material and cross-section properties, allowable load values, factors of safety, methods of calculation, and limiting factors. The EOR must verify suitability for any specific application, and the capacity of the supportive structure to receive the shown configuration and associated reaction loads. Modification to components and/or design may alter performance and must be evaluated by the EOR.

PROJECT NAME:

TYPICAL DETAILS

SERVICE REQUEST DESCRIPTION:

PIPING
BRACED CANTILEVER (MQ)
STEEL

DESIGNED BY:	REVIEWED BY:
AJV	ISE
DRAWN BY:	ISSUE DATE:
HAM	19 FEB 15

REVISIONS:

NO:	DESCRIPTION:	DATE:
A	ORIGINAL ISSUE	19 FEB 15

SERVICE REQUEST NUMBER:

TD-P-BC52-S

DRAWING NUMBER:	SHEET:
01	1/1

Maximum Pipe Diameter (in)	Allowable Vertical Load (lbs)	Allowable Transverse Load (lbs)	Allowable Longitudinal Load (lbs)	Maximum"H" (in)	Maximum"W" (in)
4	163	0	0	72	72
4	163	24	0	72	72
4	163	0	24	72	72
8	501	0	0	72	72
8	501	75	0	72	72
8	501	0	75	24	36
12	1021	0	0	54	36
12	1021	153	0	54	36
16	1595	0	0	36	24
16	1595	239	0	36	24

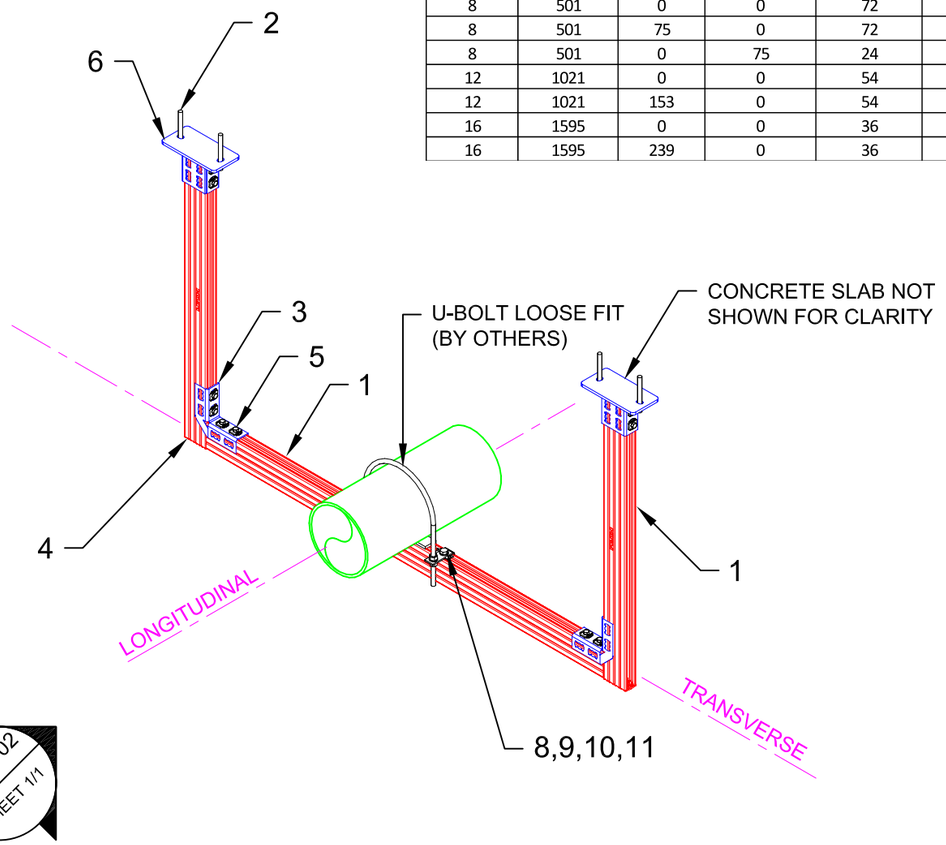

01 ISOMETRIC
N.T.S.

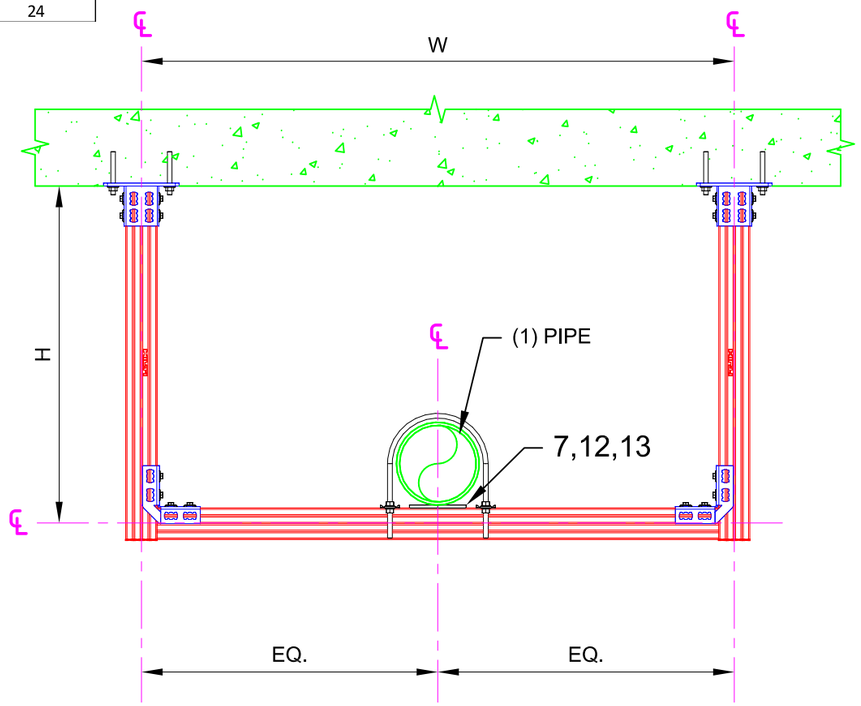

02 ELEVATION
N.T.S.

No.	Unit Qty	Unit	Description	Box Qty	# Boxes Needed	Item No.
1	AS REQ'D	EA	STRUT HS-158-12/HDG 10' B2B	1	AS REQ'D	2007087
2	2	EA	RAIL SUPPORT MQP-82	8	1	369652
3	2	EA	8-HOLE ANGLE MQW-8/90-F	10	1	304175
4	8	EA	CHANNEL END CAP MEK RED	50	1	244886
5	16	EA	CHANNEL CONNECTOR MQN-HDG PLUS	50	1	387779
6	4	EA	USE KB-TZ AS APPROPRIATE	VARIES	VARIES	VARIES
7	2	EA	CONNECTOR PIPE SHOE MIC-PG	10	1	304842
8	2	EA	MQV-UB (SPECIAL #304884)	VARIES	VARIES	SPECIAL
9	2	EA	HEX HEAD BOLT 1/2" x 1-1/4"	50	1	411767
10	2	EA	WASHER 1/2"	100	1	411758
11	2	EA	WING NUT MQM-F1/2"-F	25	1	304137
12	2	EA	3/8" CHANNEL NUT/NO SPRING 100/BOX	100	1	311937
13	2	EA	COUNTERSUNK BOLT 3/8 X 1	VARIES	VARIES	SPECIAL

NOTE(S):

1. REFER TO TABLE FOR DIMENSIONAL LIMITATIONS BASED ON PIPE DIAMETER.
2. ALLOWABLE LOADS CONSIDER APPROPRIATE LOAD FACTORS AND LOAD COMBINATIONS PER APPLICABLE CODES AND STANDARDS.
3. ALL LOADS ASSUMED TO ACT AT HORIZONTAL ℄ OF PIPE(S) WHICH ARE SITTING DIRECTLY ON TOP OF HS STRUT, U.N.O.
4. VERTICAL LOAD APPLIED WITH ONE HORIZONTAL LOAD AT A TIME.
5. MAX. SUPPORT SPACING = 10'-0"
6. ABOVE LOADING BASED ON SCH. 40 PIPE FILLED WITH WATER

All loading and design criteria supplied by customer is assumed accurate. Only the stated Design Assumptions were considered, and must be verified by the responsible Engineer of Record (EOR). The basis of Hilti component and connection design is the published data in the current Hilti Technical Guide, including material and cross-section properties, allowable load values, factors of safety, methods of calculation, and limiting factors. The EOR must verify suitability for any specific application, and the capacity of the supportive structure to receive the shown configuration and associated reaction loads. Modification to components and/or design may alter performance and must be evaluated by the EOR.

PROJECT NAME:

TYPICAL DETAILS

SERVICE REQUEST DESCRIPTION:

PIPING
TRAPEZE (MQ)
CONCRETE

DESIGNED BY:	REVIEWED BY:
AJV	ISE
DRAWN BY:	ISSUE DATE:
HAM	19 FEB 15

REVISIONS:

NO:	DESCRIPTION:	DATE:
A	ORIGINAL ISSUE	19 FEB 15

SERVICE REQUEST NUMBER:

TD--P-TR53-C

DRAWING NUMBER:	SHEET:
01	1/1

Maximum Pipe Diameter (in)	Allowable Vertical Load (lbs)	Allowable Transverse Load (lbs)	Allowable Longitudinal Load (lbs)	Maximum"H" (in)	Maximum"W" (in)
4	163	0	0	72	72
4	163	24	0	72	72
4	163	0	24	72	72
8	501	0	0	72	72
8	501	75	0	72	72
8	501	0	75	24	36
12	1021	0	0	54	36
12	1021	153	0	54	36
16	1595	0	0	36	24
16	1595	239	0	36	24

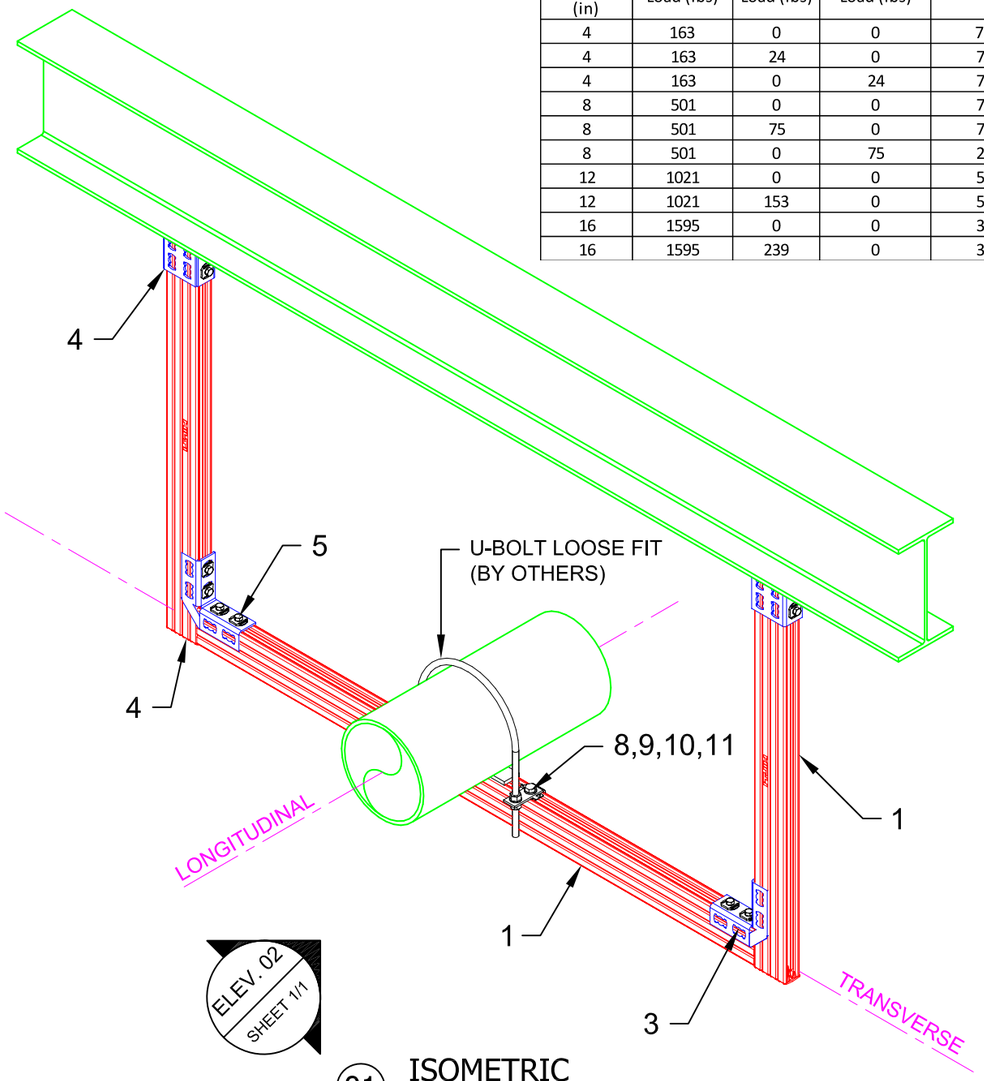

01 ISOMETRIC
N.T.S.

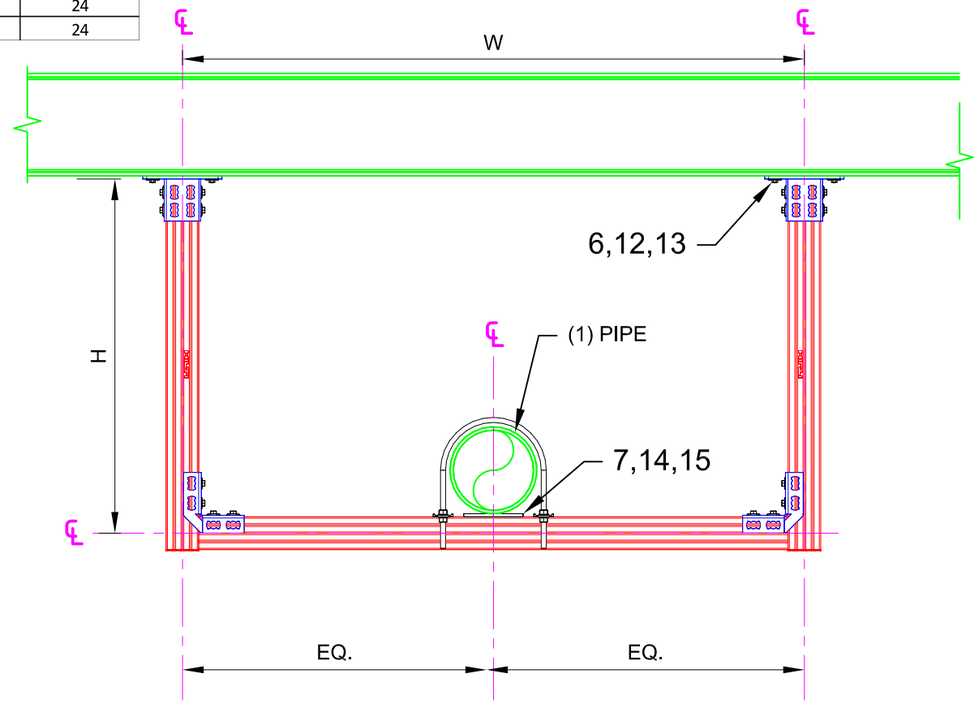

02 ELEVATION
N.T.S.

No.	Unit Qty	Unit	Description	Box Qty	# Boxes Needed	Item No.
1	AS REQ'D	EA	STRUT HS-158-12/HDG 10' B2B	1	AS REQ'D	2007087
2	2	EA	RAIL SUPPORT MQP-82	8	1	369652
3	2	EA	8-HOLE ANGLE MQW-8/90-F	10	1	304175
4	8	EA	CHANNEL END CAP MEK RED	50	1	244886
5	16	EA	CHANNEL CONNECTOR MQN-HDG PLUS	50	1	387779
6	4	EA	X-BTW10-24-6 SN12-R	100	1	377076
7	2	EA	CONNECTOR PIPE SHOE MIC-PG	10	1	304842
8	2	EA	MQV-UB (SPECIAL #304884)	VARIES	VARIES	SPECIAL
9	2	EA	HEX HEAD BOLT 1/2" x 1-1/4"	50	1	411767
10	2	EA	WASHER 1/2"	100	1	411758
11	2	EA	WING NUT MQM-F1/2"-F	25	1	304137
12	4	EA	HEX NUT-HEAVY DUTY 3/8"	100	1	411752
13	4	EA	WASHER 3/8"	200	1	411757
14	2	EA	3/8" CHANNEL NUT/NO SPRING 100/BOX	100	1	311937
15	2	EA	COUNTERSUNK BOLT 3/8 X 1	VARIES	VARIES	SPECIAL

NOTE(S):

1. REFER TO TABLE FOR DIMENSIONAL LIMITATIONS BASED ON PIPE DIAMETER.
2. ALLOWABLE LOADS CONSIDER APPROPRIATE LOAD FACTORS AND LOAD COMBINATIONS PER APPLICABLE CODES AND STANDARDS.
3. ALL LOADS ASSUMED TO ACT AT HORIZONTAL ℄ OF PIPE(S) WHICH ARE SITTING DIRECTLY ON TOP OF HS STRUT, U.N.O.
4. VERTICAL LOAD APPLIED WITH ONE HORIZONTAL LOAD AT A TIME.
5. MAX. SUPPORT SPACING = 10'-0"
6. ABOVE LOADING BASED ON SCH. 40 PIPE FILLED WITH WATER

All loading and design criteria supplied by customer is assumed accurate. Only the stated Design Assumptions were considered, and must be verified by the responsible Engineer of Record (EOR). The basis of Hilti component and connection design is the published data in the current Hilti Technical Guide, including material and cross-section properties, allowable load values, factors of safety, methods of calculation, and limiting factors. The EOR must verify suitability for any specific application, and the capacity of the supportive structure to receive the shown configuration and associated reaction loads. Modification to components and/or design may alter performance and must be evaluated by the EOR.

PROJECT NAME:

TYPICAL DETAILS

SERVICE REQUEST DESCRIPTION:

PIPING
TRAPEZE (MQ)
STEEL

DESIGNED BY:	REVIEWED BY:
AJV	ISE
DRAWN BY:	ISSUE DATE:
HAM	19 FEB 15

REVISIONS:

NO:	DESCRIPTION:	DATE:
A	ORIGINAL ISSUE	19 FEB 15

SERVICE REQUEST NUMBER:

TD-P-TR53-S

DRAWING NUMBER:	SHEET:
01	1/1

Maximum Pipe Diameter (in)	Allowable Vertical Load (lbs)	Allowable Transverse Load (lbs)	Allowable Longitudinal Load (lbs)	Maximum"H" (in)	Maximum"W" (in)
4	163	0	0	72	72
4	163	24	0	72	72
4	163	0	24	72	72
8	501	0	0	72	72
8	501	75	0	72	72
8	501	0	75	24	36
12	1021	0	0	54	36
12	1021	153	0	54	36
16	1595	0	0	36	24
16	1595	239	0	36	24

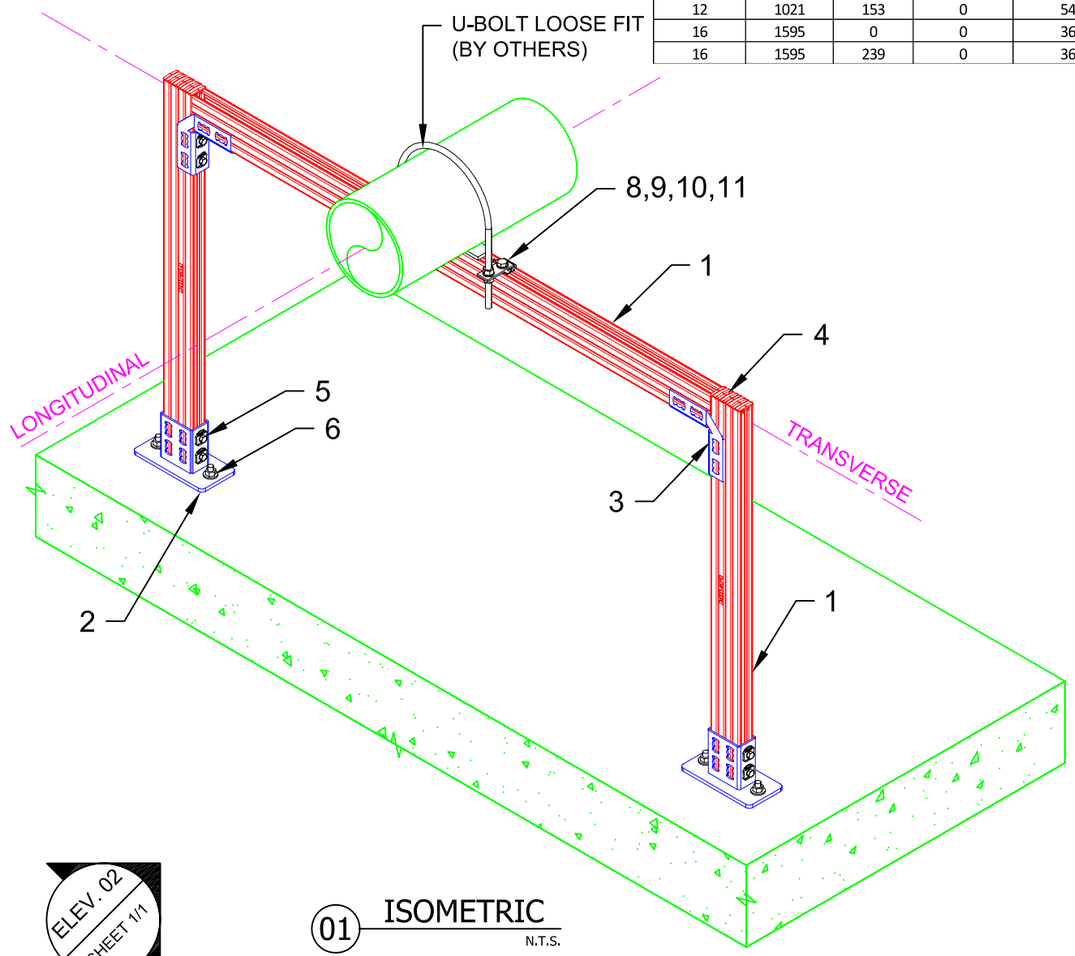

ELEV. 02
SHEET 1/1

01 ISOMETRIC
N.T.S.

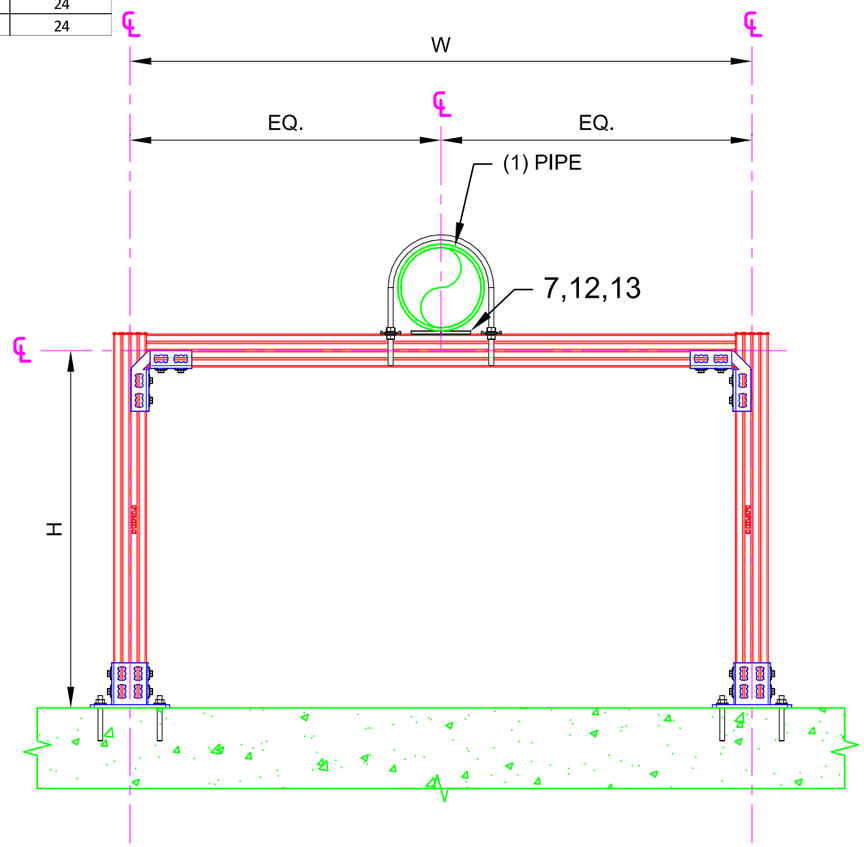

02 ELEVATION
N.T.S.

No.	Unit Qty	Unit	Description	Box Qty	# Boxes Needed	Item No.
1	AS REQ'D	EA	STRUT HS-158-12/HDG 10' B2B	1	AS REQ'D	2007087
2	2	EA	RAIL SUPPORT MQP-82	8	1	369652
3	2	EA	8-HOLE ANGLE MQW-8/90-F	10	1	304175
4	8	EA	CHANNEL END CAP MEK RED	50	1	244886
5	16	EA	CHANNEL CONNECTOR MQN-HDG PLUS	50	1	387779
6	4	EA	USE KB3 OR KB-TZ AS APPROPRIATE	VARIES	VARIES	VARIES
7	2	EA	CONNECTOR PIPE SHOE MIC-PG	10	1	304842
8	2	EA	MQV-UB (SPECIAL #304884)	VARIES	VARIES	SPECIAL
9	2	EA	HEX HEAD BOLT 1/2" x 1-1/4"	50	1	411767
10	2	EA	WASHER 1/2"	100	1	411758
11	2	EA	WING NUT MQM-F1/2"-F	25	1	304137
12	2	EA	3/8" CHANNEL NUT/NO SPRING 100/BOX	100	1	311937
13	2	EA	COUNTERSUNK BOLT 3/8 X 1	VARIES	VARIES	SPECIAL

NOTE(S):

1. REFER TO TABLE FOR DIMENSIONAL LIMITATIONS BASED ON PIPE DIAMETER.
2. ALLOWABLE LOADS CONSIDER APPROPRIATE LOAD FACTORS AND LOAD COMBINATIONS PER APPLICABLE CODES AND STANDARDS.
3. ALL LOADS ASSUMED TO ACT AT HORIZONTAL ℄ OF PIPE(S) WHICH ARE SITTING DIRECTLY ON TOP OF HS STRUT, U.N.O.
4. VERTICAL LOAD APPLIED WITH ONE HORIZONTAL LOAD AT A TIME.
5. MAX. SUPPORT SPACING = 10'-0"
6. ABOVE LOADING BASED ON SCH. 40 PIPE FILLED WITH WATER

All loading and design criteria supplied by customer is assumed accurate. Only the stated Design Assumptions were considered, and must be verified by the responsible Engineer of Record (EOR). The basis of Hilti component and connection design is the published data in the current Hilti Technical Guide, including material and cross-section properties, allowable load values, factors of safety, methods of calculation, and limiting factors. The EOR must verify suitability for any specific application, and the capacity of the supportive structure to receive the shown configuration and associated reaction loads. Modification to components and/or design may alter performance and must be evaluated by the EOR.

PROJECT NAME:

TYPICAL DETAILS

SERVICE REQUEST DESCRIPTION:

PIPING
GOALPOST (MQ)
CONCRETE

DESIGNED BY:	REVIEWED BY:
AJV	ISE
DRAWN BY:	ISSUE DATE:
HAM	19 FEB 15

REVISIONS:

NO:	DESCRIPTION:	DATE:
A	ORIGINAL ISSUE	19 FEB 15

SERVICE REQUEST NUMBER:

TD-P-GP54-C

DRAWING NUMBER:	SHEET:
01	1/1

Maximum Pipe Diameter (in)	Allowable Vertical Load (lbs)	Allowable Transverse Load (lbs)	Allowable Longitudinal Load (lbs)	Maximum"H" (in)	Maximum"W" (in)
4	163	0	0	72	72
4	163	24	0	72	72
4	163	0	24	72	72
8	501	0	0	72	72
8	501	75	0	72	72
8	501	0	75	24	36
12	1021	0	0	54	36
12	1021	153	0	54	36
16	1595	0	0	36	24
16	1595	239	0	36	24

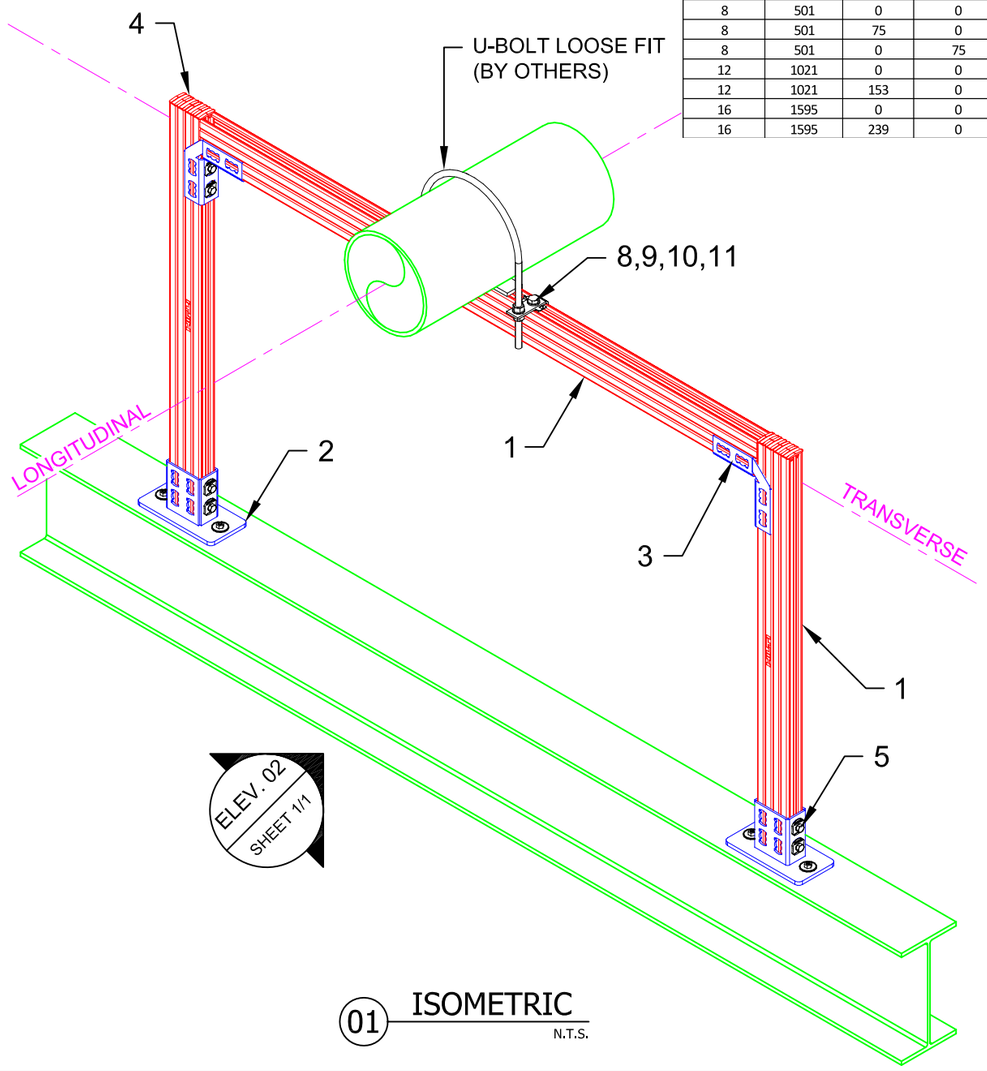

01 ISOMETRIC
N.T.S.

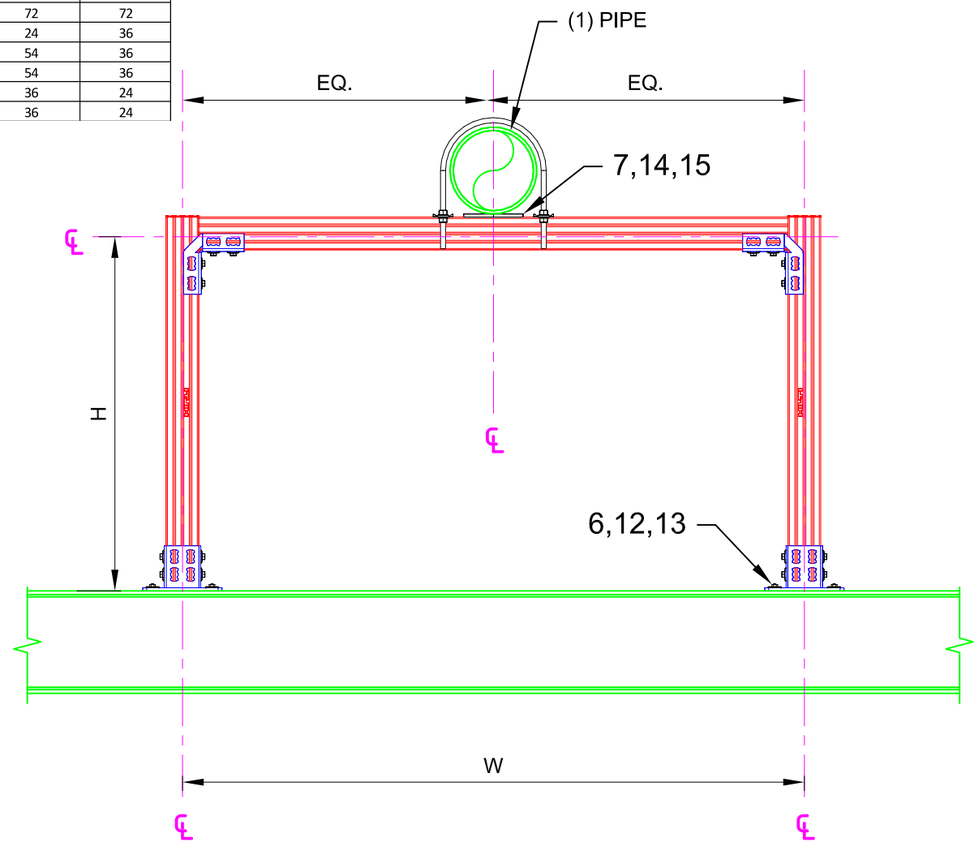

02 ELEVATION
N.T.S.

No.	Unit Qty	Unit	Description	Box Qty	# Boxes Needed	Item No.
1	AS REQ'D	EA	STRUT HS-158-12/HDG 10' B2B	1	AS REQ'D	2007087
2	2	EA	RAIL SUPPORT MQP-82	8	1	369652
3	2	EA	8-HOLE ANGLE MQW-8/90-F	10	1	304175
4	8	EA	CHANNEL END CAP MEK RED	50	1	244886
5	16	EA	CHANNEL CONNECTOR MQN-HDG PLUS	50	1	387779
6	4	EA	X-BTW10-24-6 SN12-R	100	1	377076
7	1	EA	CONNECTOR PIPE SHOE MIC-PG	10	1	304842
8	2	EA	MQV-UB (SPECIAL #304884)	VARIES	VARIES	SPECIAL
9	2	EA	HEX HEAD BOLT 1/2" x 1-1/4"	50	1	411767
10	2	EA	WASHER 1/2"	100	1	411758
11	2	EA	WING NUT MQM-F1/2"-F	25	1	304137
12	4	EA	HEX NUT-HEAVY DUTY 3/8"	100	1	411752
13	4	EA	WASHER 3/8"	200	1	411757
14	1	EA	3/8" CHANNEL NUT/NO SPRING 100/BOX	100	1	311937
15	1	EA	COUNTERSUNK BOLT 3/8 X 1	VARIES	VARIES	SPECIAL

NOTE(S):

1. REFER TO TABLE FOR DIMENSIONAL LIMITATIONS BASED ON PIPE DIAMETER.
2. ALLOWABLE LOADS CONSIDER APPROPRIATE LOAD FACTORS AND LOAD COMBINATIONS PER APPLICABLE CODES AND STANDARDS.
3. ALL LOADS ASSUMED TO ACT AT HORIZONTAL ℄ OF PIPE(S) WHICH ARE SITTING DIRECTLY ON TOP OF HS STRUT, U.N.O.
4. VERTICAL LOAD APPLIED WITH ONE HORIZONTAL LOAD AT A TIME.
5. MAX. SUPPORT SPACING = 10'-0"
6. ABOVE LOADING BASED ON SCH. 40 PIPE FILLED WITH WATER

All loading and design criteria supplied by customer is assumed accurate. Only the stated Design Assumptions were considered, and must be verified by the responsible Engineer of Record (EOR). The basis of Hilti component and connection design is the published data in the current Hilti Technical Guide, including material and cross-section properties, allowable load values, factors of safety, methods of calculation, and limiting factors. The EOR must verify suitability for any specific application, and the capacity of the supportive structure to receive the shown configuration and associated reaction loads. Modification to components and/or design may alter performance and must be evaluated by the EOR.

PROJECT NAME:

TYPICAL DETAILS

SERVICE REQUEST DESCRIPTION:

PIPING
GOALPOST (MQ)
STEEL

DESIGNED BY:	REVIEWED BY:
AJV	ISE
DRAWN BY:	ISSUE DATE:
HAM	19 FEB 15

REVISIONS:

NO:	DESCRIPTION:	DATE:
A	ORIGINAL ISSUE	19 FEB 15

SERVICE REQUEST NUMBER:

TD-P-GP54-S

DRAWING NUMBER:	SHEET:
01	1/1

Maximum Pipe Diameter (in)	Allowable Vertical Load (lbs)	Allowable Transverse Load (lbs)	Allowable Longitudinal Load (lbs)	Maximum"L1" (in)
4	163	0	0	36
4	163	24	0	36
4	163	0	24	36

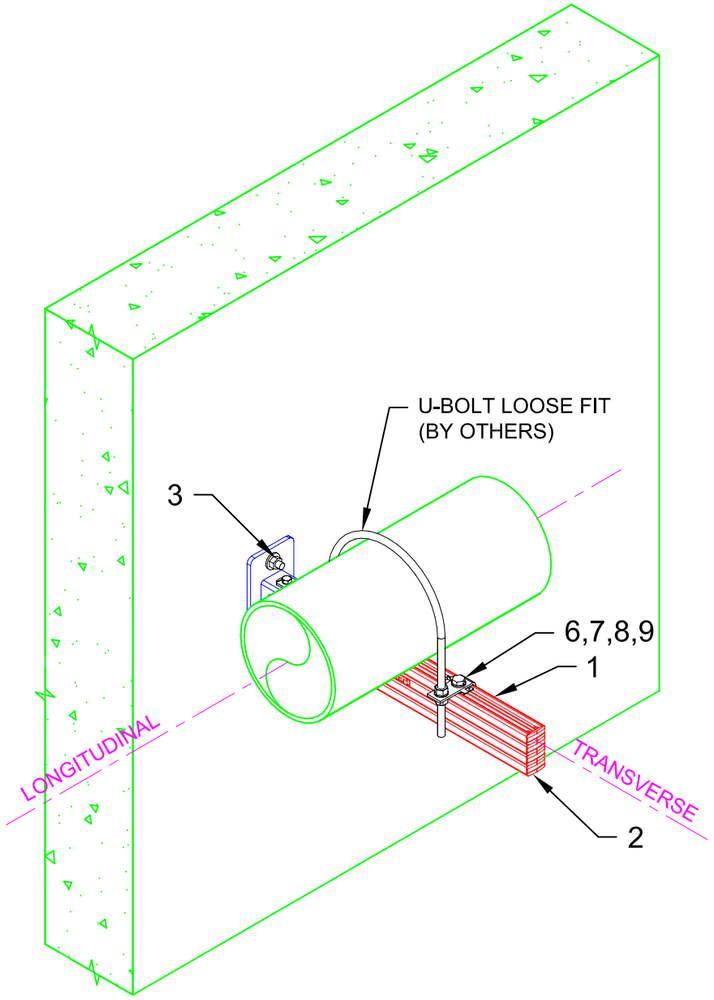

ELEV. 02
SHEET 1/1

01 ISOMETRIC
N.T.S.

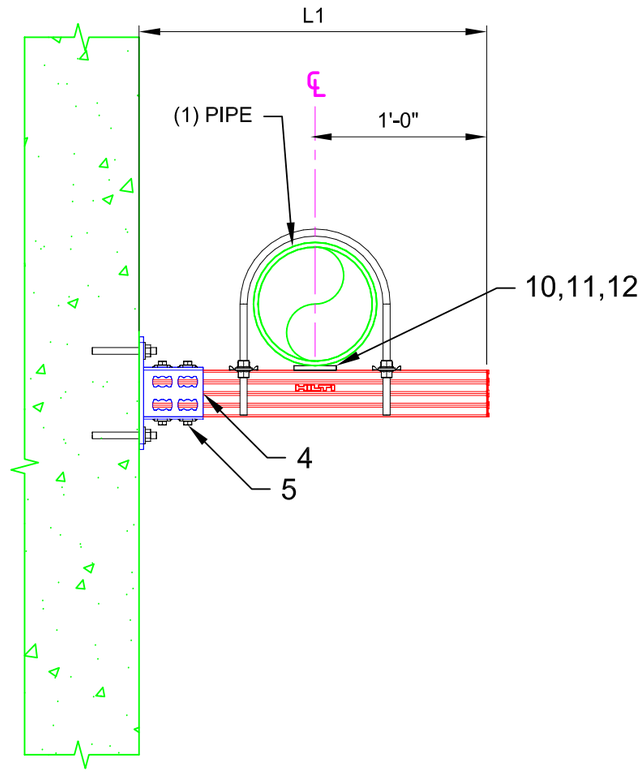

02 ELEVATION
N.T.S.

No.	Unit Qty	Unit	Description	Box Qty	# Boxes Needed	Item No.
1	AS REQ'D	EA	STRUT HS-158-12/HDG 10' B2B	1	AS REQ'D	2007087
2	4	EA	CHANNEL END CAP MEK RED	50	1	244886
3	2	EA	USE KB3 OR KB-TZ AS APPROPRIATE	VARIES	VARIES	VARIES
4	1	EA	RAIL SUPPORT MQP-82-F	1	1	304166
5	4	EA	CHANNEL CONNECTOR MQN-HDG PLUS	50	1	387779
6	2	EA	MQV-UB (SPECIAL #304884)	VARIES	VARIES	SPECIAL
7	2	EA	HEX HEAD BOLT 1/2" x 1-1/4"	50	1	411767
8	2	EA	WASHER 1/2"	100	1	411758
9	2	EA	WING NUT MQM-F1/2"-F	25	1	304137
10	1	EA	CONNECTOR PIPE SHOE MIC-PG	10	1	304842
11	1	EA	3/8" CHANNEL NUT/NO SPRING 100/BOX	100	1	311937
12	1	EA	COUNTERSUNK BOLT 3/8 X 1	VARIES	VARIES	SPECIAL

NOTE(S):

1. REFER TO TABLE FOR DIMENSIONAL LIMITATIONS BASED ON PIPE DIAMETER.
2. ALLOWABLE LOADS CONSIDER APPROPRIATE LOAD FACTORS AND LOAD COMBINATIONS PER APPLICABLE CODES AND STANDARDS.
3. ALL LOADS ASSUMED TO ACT AT HORIZONTAL ℄ OF PIPE(S) WHICH ARE SITTING DIRECTLY ON TOP OF HS STRUT, U.N.O.
4. VERTICAL LOAD APPLIED WITH ONE HORIZONTAL LOAD AT A TIME.
5. MAX. SUPPORT SPACING = 10'-0"
6. ABOVE LOADING BASED ON SCH. 40 PIPE FILLED WITH WATER

All loading and design criteria supplied by customer is assumed accurate. Only the stated Design Assumptions were considered, and must be verified by the responsible Engineer of Record (EOR). The basis of Hilti component and connection design is the published data in the current Hilti Technical Guide, including material and cross-section properties, allowable load values, factors of safety, methods of calculation, and limiting factors. The EOR must verify suitability for any specific application, and the capacity of the supportive structure to receive the shown configuration and associated reaction loads. Modification to components and/or design may alter performance and must be evaluated by the EOR.

PROJECT NAME:

TYPICAL DETAILS

SERVICE REQUEST DESCRIPTION:

PIPING
CANTILEVER (MQ)
CONCRETE

DESIGNED BY:	REVIEWED BY:
AJV	ISE
DRAWN BY:	ISSUE DATE:
HAM	19 FEB 15

REVISIONS:

NO:	DESCRIPTION:	DATE:
A	ORIGINAL ISSUE	19 FEB 15

SERVICE REQUEST NUMBER:

TD-P-C55-C

DRAWING NUMBER:	SHEET:
01	1/1

Maximum Pipe Diameter (in)	Allowable Vertical Load (lbs)	Allowable Transverse Load (lbs)	Allowable Longitudinal Load (lbs)	Maximum"L1" (in)
4	163	0	0	36
4	163	24	0	36
4	163	0	24	36

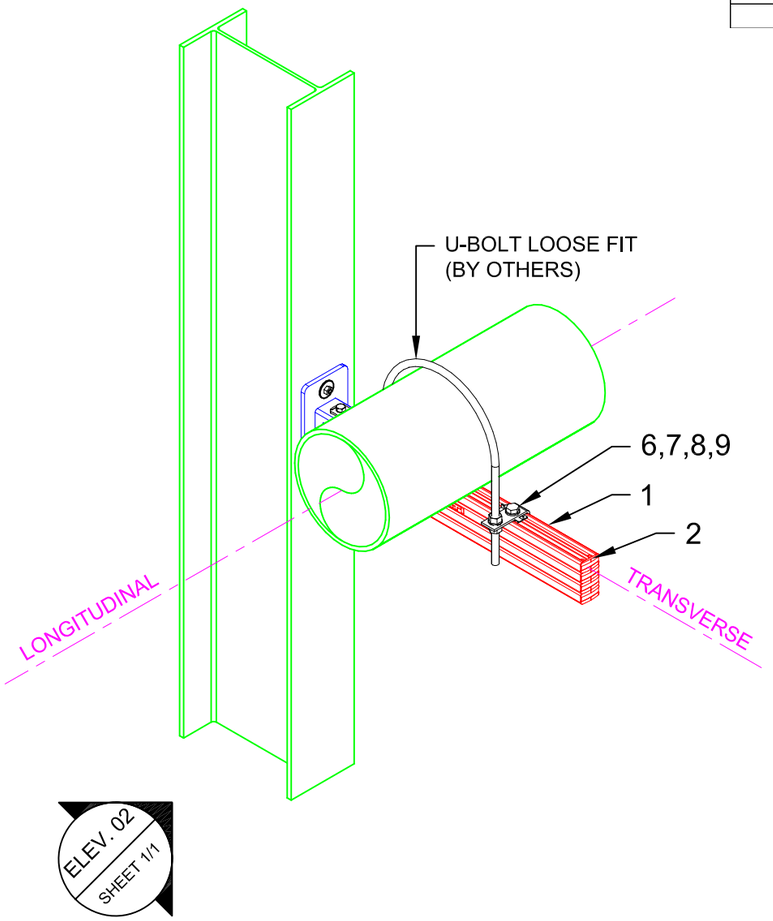

01 ISOMETRIC
N.T.S.

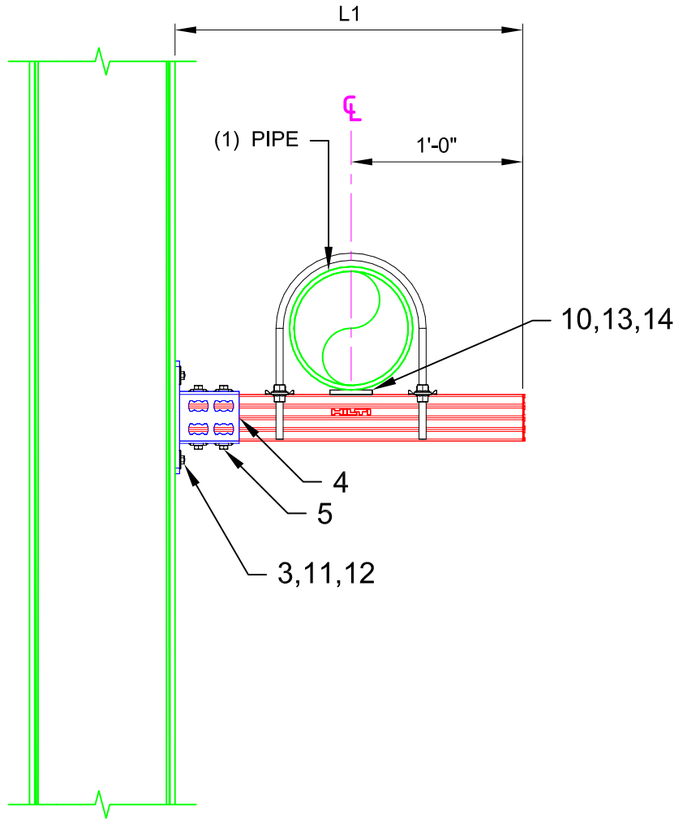

02 ELEVATION
N.T.S.

No.	Unit Qty	Unit	Description	Box Qty	# Boxes Needed	Item No.
1	AS REQ'D	EA	STRUT HS-158-12/HDG 10' B2B	1	AS REQ'D	2007087
2	4	EA	CHANNEL END CAP MEK RED	50	1	244886
3	2	EA	X-BTW10-24-6 SN12-R	100	1	377076
4	1	EA	RAIL SUPPORT MQP-82-F	1	1	304166
5	4	EA	CHANNEL CONNECTOR MQN-HDG PLUS	50	1	387779
6	2	EA	MQV-UB (SPECIAL #304884)	VARIES	VARIES	SPECIAL
7	2	EA	HEX HEAD BOLT 1/2" x 1-1/4"	50	1	411767
8	2	EA	WASHER 1/2"	100	1	411758
9	2	EA	WING NUT MQM-F1/2"-F	25	1	304137
10	1	EA	CONNECTOR PIPE SHOE MIC-PG	10	1	304842
11	2	EA	HEX NUT-HEAVY DUTY 3/8"	100	1	411752
12	2	EA	WASHER 3/8"	200	1	411757
13	1	EA	3/8" CHANNEL NUT/NO SPRING 100/BOX	100	1	311937
14	1	EA	COUNTERSUNK BOLT 3/8 X 1	VARIES	VARIES	SPECIAL

NOTE(S):

1. REFER TO TABLE FOR DIMENSIONAL LIMITATIONS BASED ON PIPE DIAMETER.
2. ALLOWABLE LOADS CONSIDER APPROPRIATE LOAD FACTORS AND LOAD COMBINATIONS PER APPLICABLE CODES AND STANDARDS.
3. ALL LOADS ASSUMED TO ACT AT HORIZONTAL ℄ OF PIPE(S) WHICH ARE SITTING DIRECTLY ON TOP OF HS STRUT, U.N.O.
4. VERTICAL LOAD APPLIED WITH ONE HORIZONTAL LOAD AT A TIME.
5. MAX. SUPPORT SPACING = 10'-0"
6. ABOVE LOADING BASED ON SCH. 40 PIPE FILLED WITH WATER

All loading and design criteria supplied by customer is assumed accurate. Only the stated Design Assumptions were considered, and must be verified by the responsible Engineer of Record (EOR). The basis of Hilti component and connection design is the published data in the current Hilti Technical Guide, including material and cross-section properties, allowable load values, factors of safety, methods of calculation, and limiting factors. The EOR must verify suitability for any specific application, and the capacity of the supportive structure to receive the shown configuration and associated reaction loads. Modification to components and/or design may alter performance and must be evaluated by the EOR.

PROJECT NAME:

TYPICAL DETAILS

SERVICE REQUEST DESCRIPTION:

PIPING
CANTILEVER (MQ)
STEEL

DESIGNED BY:	REVIEWED BY:
AJV	ISE
DRAWN BY:	ISSUE DATE:
HAM	19 FEB 15

REVISIONS:

NO:	DESCRIPTION:	DATE:
A	ORIGINAL ISSUE	19 FEB 15

SERVICE REQUEST NUMBER:

TD-P-C55-S

DRAWING NUMBER:	SHEET:
01	1/1