Maximum Pipe Diameter (in)	Allowable Vertical Load (lbs)	Allowable Transverse Load (lbs)	Allowable Longitudinal Load (lbs)	Maximum"H" (in)	Maximum"W" (in)
4	163	0	0	72	72
4	163	24	0	72	72
4	163	0	24	72	72
8	501	0	0	72	72
8	501	75	0	72	72
8	501	0	75	24	36
12	1021	0	0	54	36
12	1021	153	0	54	36
16	1595	0	0	36	24
16	1595	239	0	36	24

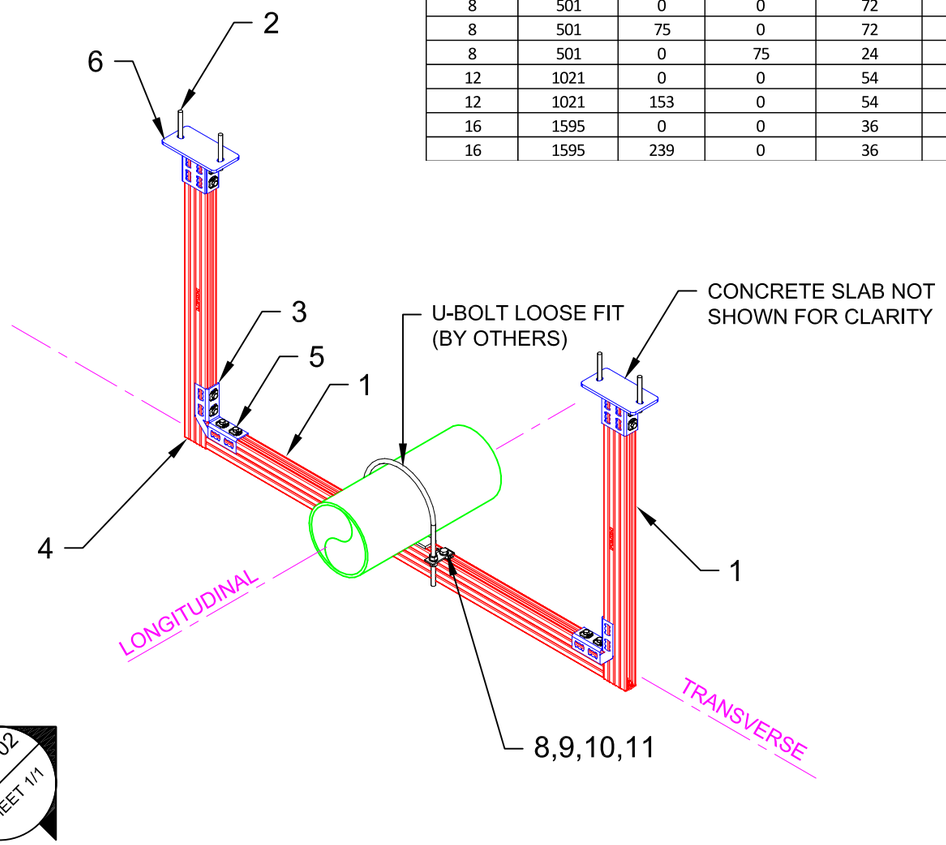

01 ISOMETRIC
N.T.S.

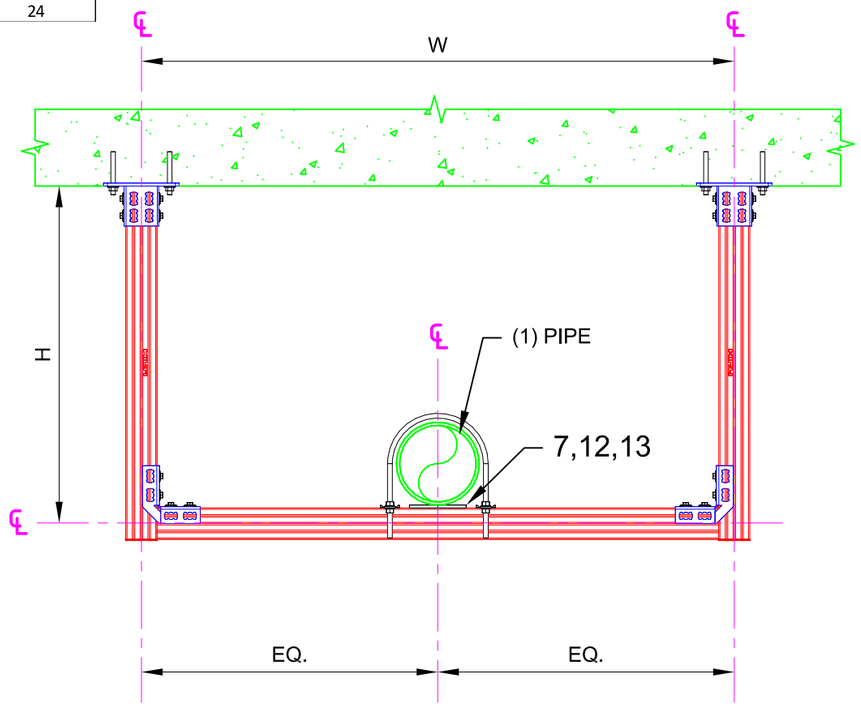

02 ELEVATION
N.T.S.

No.	Unit Qty	Unit	Description	Box Qty	# Boxes Needed	Item No.
1	AS REQ'D	EA	STRUT HS-158-12/HDG 10' B2B	1	AS REQ'D	2007087
2	2	EA	RAIL SUPPORT MQP-82	8	1	369652
3	2	EA	8-HOLE ANGLE MQW-8/90-F	10	1	304175
4	8	EA	CHANNEL END CAP MEK RED	50	1	244886
5	16	EA	CHANNEL CONNECTOR MQN-HDG PLUS	50	1	387779
6	4	EA	USE KB-TZ AS APPROPRIATE	VARIES	VARIES	VARIES
7	2	EA	CONNECTOR PIPE SHOE MIC-PG	10	1	304842
8	2	EA	MQV-UB (SPECIAL #304884)	VARIES	VARIES	SPECIAL
9	2	EA	HEX HEAD BOLT 1/2" x 1-1/4"	50	1	411767
10	2	EA	WASHER 1/2"	100	1	411758
11	2	EA	WING NUT MQM-F1/2"-F	25	1	304137
12	2	EA	3/8" CHANNEL NUT/NO SPRING 100/BOX	100	1	311937
13	2	EA	COUNTERSUNK BOLT 3/8 X 1	VARIES	VARIES	SPECIAL

NOTE(S):

1. REFER TO TABLE FOR DIMENSIONAL LIMITATIONS BASED ON PIPE DIAMETER.
2. ALLOWABLE LOADS CONSIDER APPROPRIATE LOAD FACTORS AND LOAD COMBINATIONS PER APPLICABLE CODES AND STANDARDS.
3. ALL LOADS ASSUMED TO ACT AT HORIZONTAL ℄ OF PIPE(S) WHICH ARE SITTING DIRECTLY ON TOP OF HS STRUT, U.N.O.
4. VERTICAL LOAD APPLIED WITH ONE HORIZONTAL LOAD AT A TIME.
5. MAX. SUPPORT SPACING = 10'-0"
6. ABOVE LOADING BASED ON SCH. 40 PIPE FILLED WITH WATER

All loading and design criteria supplied by customer is assumed accurate. Only the stated Design Assumptions were considered, and must be verified by the responsible Engineer of Record (EOR). The basis of Hilti component and connection design is the published data in the current Hilti Technical Guide, including material and cross-section properties, allowable load values, factors of safety, methods of calculation, and limiting factors. The EOR must verify suitability for any specific application, and the capacity of the supportive structure to receive the shown configuration and associated reaction loads. Modification to components and/or design may alter performance and must be evaluated by the EOR.

PROJECT NAME:

TYPICAL DETAILS

SERVICE REQUEST DESCRIPTION:

PIPING
TRAPEZE (MQ)
CONCRETE

DESIGNED BY:	REVIEWED BY:
AJV	ISE
DRAWN BY:	ISSUE DATE:
HAM	19 FEB 15

REVISIONS:

NO:	DESCRIPTION:	DATE:
A	ORIGINAL ISSUE	19 FEB 15

SERVICE REQUEST NUMBER:

TD--P-TR53-C

DRAWING NUMBER:	SHEET:
01	1/1